技術資料 Technische Documentatie **Documentation**
Documentação técnica Documentación técnica **Documentazione tecnica**
Technische Dokumentation Technical Documentation Техническая документация
Documentazione tecnica Technische documentatie
Техническая документация **Teknik Doküman** 技术资料
Documentazione tecnica Dokumentacja techniczna
Technische documentatie Documentación técnica
기술 자료 **Technische documentatie** 技術資料
Documentation technique Teknik Doküman **Dokumentacja techniczna**
Technical Documentation **Documentazione tecnica** Technical Documentation
Dokumentacja techniczna 技术资料 Documentation technique
Техническая документация Technische Dokumentation Teknik Doküman
Dokumentacja techniczna **Technische documentatie**
Documentation technique 기술 자료 Dokumentacja techniczna

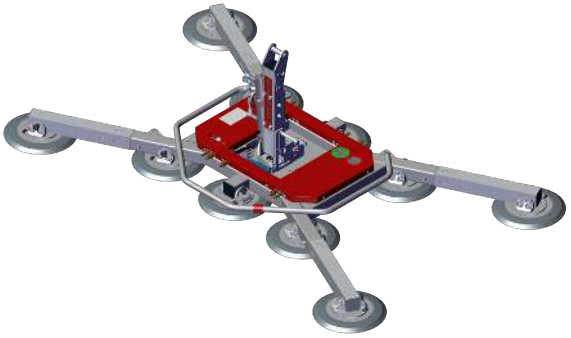

Uplifter UPG 1000

Operating instructions

WWW.UPLIFTER.DE

EN-US · 30.30.01.02735 · 00 · 10/21

Note

The Operating instructions were originally written in German. Store in a safe place for future reference. Subject to technical changes without notice. No responsibility is taken for printing or other types of errors.

Published by

© Uplifter GmbH & Co. KG, 10/21

This document is protected by copyright. Uplifter GmbH & Co. KG retains the rights established thereby. Reproduction of the contents, in full or in part, is only permitted within the limits of the legal provisions of copyright law. Any modifications to or abridgments of the document are prohibited without explicit written agreement from Uplifter GmbH & Co. KG.

Contact

Uplifter GmbH & Co. KG

Oberaich 5

92543 Guteneck, Germany

Tel +49 9433- 20499- 0

Fax +49 9433- 20499-29

http://www.uplifter.de

E-mail: info@uplifter.de

Contents

1 Important Information 5
1.1 The technical documentation is part of the product 5
1.2 Note on Using these Operating Instructions 5
1.3 Warnings in This Document 5
1.4 Symbol 5
1.5 Information Signs on the Lifting Device 6
1.6 Type Plate 7

2 Fundamental Safety Instructions 8
2.1 Intended Use 8
2.2 Non-Intended Use 8
2.3 Danger Zone 8
2.4 Hazards during Operation 9
2.5 Environmental and Operating Conditions 9
2.6 Workplace Requirements 10
2.7 Personnel Qualifications 10
2.8 Personal Protective Equipment 11
2.9 Safety Features 11
2.10 Technical Condition 11
2.11 Responsibility of the Operating Company 11
2.12 Country-Specific Regulations for the Operating Company 11

3 Product Description 12
3.1 Components 12
3.2 Operating Elements 12
3.2.1 Main Switch 12
3.2.2 Operating Panel 13
3.2.3 Remote control (optional) 13
3.2.4 Load Arm with Hydraulic Cylinder 14
3.3 Vacuum Pump 14
3.4 Suction Plates 14
3.5 Power Supply 15

4 Technical Data 16
4.1 Lifting Device 16
4.2 Vacuum Generation 16

5 Transport and Storage 17
5.1 Protective Equipment 17
5.2 Checking the Delivery 17
5.3 Transporting the Lifting Device 17
5.4 Storing the lifting device 18

6 Installation 19
6.1 Safety 19
6.1.1 Safety Instructions for Installation 19
6.1.2 Protective Equipment 19
6.2 Fastening the Lifting Device 19
6.3 External Enable Signal for Releasing the Load 19

6.4 Start of Operations ... 20

7 Operation ... 21
7.1 Safety ... 21
7.1.1 Safety Instructions for Operation ... 21
7.1.2 Personnel Qualifications ... 21
7.1.3 Protective Equipment ... 21
7.1.4 Using the Lifting Device Properly ... 22
7.1.5 What to Do in an Emergency ... 22
7.2 Checks before Starting Work ... 22
7.3 Adjusting the Position of the Suction Plates ... 23
7.4 Arrangement of Suction Plates ... 24
7.5 Working Without a Load Arm ... 26
7.5.1 Removing the Load Arm ... 26
7.5.2 Suspending the Lifting Device from Shackles ... 26
7.5.3 Attaching the Load Arm ... 27
7.6 Gripping the Load ... 27
7.7 Handling a Load ... 29
7.8 Safely Guiding the Lifted Load ... 29
7.9 Swivel load ... 30
7.10 Rotating the Load ... 31
7.11 Setting Down the Load ... 32
7.12 Parking the Lifting Device ... 33
7.13 Charging the Battery ... 34

8 Troubleshooting ... 35
8.1 Safety ... 35
8.1.1 Safety Instructions for Troubleshooting ... 35
8.1.2 Protective Equipment ... 36
8.2 Troubleshooting ... 36

9 Maintenance ... 38
9.1 Safety ... 38
9.1.1 Safety Instructions for Maintenance ... 38
9.1.2 Protective Equipment ... 39
9.2 Regular Inspections ... 39
9.3 Maintenance schedule ... 39
9.4 Inspecting Safety Features ... 40
9.4.1 Checking the Gauge and Warning Device ... 41
9.4.2 Checking Vacuum Hoses and Hose Clamps ... 41
9.4.3 Checking the Lifting Device for Leaks ... 41
9.4.4 Check pressure loss at the dust filter ... 42
9.5 Cleaning the Dust Filter ... 42
9.6 Cleaning the Lifting Device ... 43
9.7 Replacing the Battery ... 44

10 Decommissioning and Recycling ... 46
10.1 Safety ... 46
10.2 Decommissioning the lifting device ... 46
10.3 Disposing of the lifting device ... 46

11 EC Conformity ... 47

1 Important Information

1.1 The technical documentation is part of the product

1. For problem-free and safe operation, follow the instructions in the documents.
2. Keep the technical documentation in close proximity to the product. The documentation must be accessible to personnel at all times.
3. Pass on the technical documentation to subsequent users.

⇨ Failure to follow the instructions in these Operating instructions may result in life-threatening injuries!

⇨ Uplifter is not liable for damage or malfunctions that result from failure to heed these instructions.

If you still have questions after reading the technical documentation, contact Uplifter Service at:

www.uplifter.de

1.2 Note on Using these Operating Instructions

The UPG product is generally referred to as the lifting device.

The Uplifter GmbH & Co. KG is generally referred to as Uplifter in these operating instructions.

These operating instructions contain important notes and information about the different operating phases of the lifting device:

- Transport, storage, start of operations and decommissioning
- Safe operation, required maintenance, rectification of any faults

The operating instructions describe the lifting device UPG at the time of delivery by Uplifter.

1.3 Warnings in This Document

Warnings warn against hazards that may occur when handling the product. The signal word indicates the level of danger.

Signal word	Meaning
DANGER	Indicates a high-risk hazard that will result in death or serious injury if not avoided.
WARNING	Indicates a medium-risk hazard that could result in death or serious injury if not avoided.
CAUTION	Indicates a low-risk hazard that could result in minor or moderate injury if not avoided.
NOTE	Indicates a danger that leads to property damage.

1.4 Symbol

This symbol indicates useful and important information.

✓ This symbol represents a prerequisite that must be met prior to an operational step.

‣ This symbol represents an action to be performed.

⇨ This symbol represents the result of an action.

Actions that consist of more than one step are numbered:

1. First action to be performed.
2. Second action to be performed.

1.5 Information Signs on the Lifting Device

Read instructions
27.03.01.00291

Next inspection according to UVV (German accident prevention regulations, valid for Germany)
27.03.01.00544

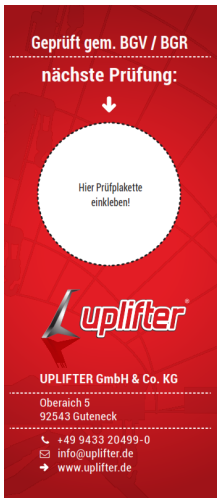

Date indicator for UVV inspection
27.03.01.00055

Permissible lift capacity
27.03.01.00882

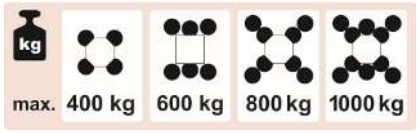

Safety instructions
27.03.01.00581

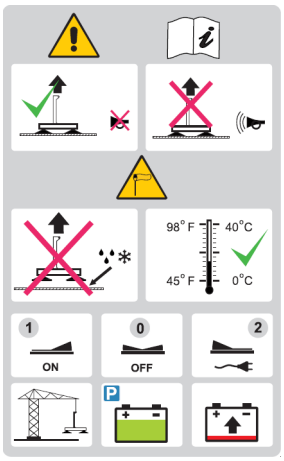

Handling
27.03.01.00497

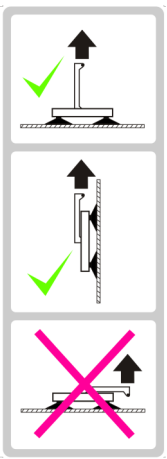

1.6 Type Plate

The type plate is permanently attached to the product and must always be clearly legible.

For each product, the type plate contains the following data:

- Abbreviated device designation
- Order number
- Serial number or SNR
- Year of manufacture
- Max. permitted lift capacity
- Weight
- Electrical voltage

▸ Please specify all the information above when ordering replacement parts, making warranty claims or for any other inquiries.

2 Fundamental Safety Instructions

2.1 Intended Use

The lifting device UPG 1000 is built exclusively to support manual lifting and transporting, swiveling or rotating of airtight loads at low and high levels using vacuum.

The load can be lifted in a horizontal or vertical position.

The load can be rotated and swiveled using the lifting device.

The suction surfaces of the load to be lifted must be airtight – that is, when vacuum generation fails, the load being gripped must be held for at least five minutes. This must be ensured during the start of operations as well as before handling an unknown load by means of several lifting tests *(> See ch. Start of Operations)*.

Protective foil must be removed from the area of the suction plates.

The load to be lifted must be sufficiently rigid so that it is not damaged during gripping and handling.

The lifting device is built in accordance with the latest standards of technology and is delivered in a safe operating condition; however, hazards may arise during use. Observe the warnings in these operating instructions.

The maximum lift capacity must not be exceeded *(> See ch. Technical Data)*.

The maximum permitted lift capacity changes in proportion to the number of activated suction plates.

2.2 Non-Intended Use

Uplifter accepts no liability for damage caused by the use of the lifting device for purposes other than those described under Intended Use. The use of the lifting device for loads that are not specified in the order confirmation or that have different physical properties than those specified in the order confirmation shall be considered non-intended use.

In particular, the following are considered non-intended use:

- Using as a climbing aid
- Lifting people or animals
- Storing loads while picked up
- Applying suction to building components, equipment or supporting surfaces.
- Applying suction to liquids.
- Applying suction to bulk materials (e.g. granulates)
- Evacuation of objects that are in danger of imploding
- Supporting the lifting process by applying external forces
- Attachment of loads using ropes, chains or similar

2.3 Danger Zone

Persons in the danger zone of the lifting device UPG may suffer life-threatening injuries.

▸ Ensure that no persons are present in the danger zone!

The danger zone of the lifting device UPG includes the following areas:

- The area directly below the lifting device and load.
- The area immediately surrounding the lifting device and load.

2.4 Hazards during Operation

⚠ CAUTION

Shearing off of the load due to collision with surrounding objects

Risk of injury!

- Ensure that no obstacles or interference contours are present within the working zone during handling.

⚠ CAUTION

Risk of injury due to exposed suction points

- Do not place eyes, ears or hands into suction points.
- Do not bring exposed suction points close to eyes or body orifices.
- Do not place suction plates on the human body.

NOTE

Damage to vacuum hoses due to pointed or sharp objects

- Ensure that the vacuum hoses cannot be damaged by pointed or sharp objects.

2.5 Environmental and Operating Conditions

⚠ DANGER

Uncontrolled movement of the lifting device due to wind

Risk of injury

- Only work with the lifting device in environments without wind.

⚠ CAUTION

Dangerous* aerosols, dust, vapors, gases or solvents in the ambient air

Risk of injury from falling load due to damage to vacuum components (vacuum generators, vacuum supply hoses, suction cups, etc.)!

Danger of breathing difficulties due to hazardous substances that are sucked in and distributed by the vacuum generator.

- Before commencing work, ensure that the ambient air does not contain any hazardous substances.
- Make sure that there are no hazardous substances on the load that can be sucked in.

⇨ *) Examples of hazardous substances: Acids, alkalis, conductive dusts, combustible media, etc.

⚠ CAUTION

Blockage of the vacuum system from sucking in liquids

Risk of injury from falling load!

- Do not pick up liquids or bulk materials.
- Observe the gauge and the signal from the warning device.

The lifting device UPG may only be operated under the following conditions:

- Temperature range from 0 °C to +40 °C.
- Maximum relative humidity 90%, non-condensing.
- The contact surfaces between the suction cup and load must be free from humidity, moisture, dirt, dust, oil or other substances that may reduce friction levels.
- The lifting device UPG must be sufficiently dimensioned for the loads to be lifted.

Negative list: The product must **not** be operated under the following conditions:

- Using the product in a potentially explosive environment may cause an explosion.
- The required minimum vacuum cannot be achieved at an ambient pressure of less than 900 mbar (operation sites more than 1600 m above sea level).

- If in doubt, consult Uplifter before the start of operations.

2.6 Workplace Requirements

The following requirements must be fulfilled to ensure a safe workplace:

- The operating company is obligated to perform a risk assessment for the environmental conditions at the installation location.
- The type plate and information signs must be legible.
- The operator must have a clear view of the whole working area, the workplace must be adequately lit and free of glare and the area around the workplace must be clean and clear.

2.7 Personnel Qualifications

Unqualified personnel cannot recognize dangers and are therefore exposed to higher risks!

The operating company must ensure the following points:

- The personnel must be commissioned for the activities described in these operating instructions.
- The staff must be at least 18 years of age and physically and mentally capable.
- The product must be operated only by persons who have undergone appropriate training.
- Personnel must receive regular safety briefings (frequency as per country-specific regulations).
- Work on electrical equipment must be carried out only by qualified electrical specialists.
- Installation, maintenance, and repairs must be carried out only by specialists from Uplifter GmbH & Co. KG or by persons who can prove that they have undergone appropriate training at Uplifter.

The following target groups are addressed in these operating instructions:

- Persons trained in operating and cleaning the product.
- Mechanical and electrical specialists who are responsible for installing, troubleshooting and maintaining the product.

Valid for Germany:

A qualified employee is defined as an employee who has received technical training and has the knowledge and experience – including knowledge of applicable regulations – necessary to enable him or her to recognize possible dangers and implement the appropriate safety measures while performing tasks. Qualified personnel must observe the pertinent industry-specific rules and regulations.

2.8 Personal Protective Equipment

To avoid injury, always use appropriate protective equipment that is suitable for the situation.

Observe the notes on protective equipment in the corresponding chapters and any country-specific regulations.

2.9 Safety Features

The lifting device has the following safety features:

- Two redundant vacuum circuits:
  The components of the vacuum circuits are color coded.
- Audible warning device:
  A warning tone sounds when the vacuum is between 0 bar and -0,6 bar.
- A warning tone sounds when the battery is not sufficiently charged.
- A vacuum reservoir with non-return valve for each vacuum circuit maintains the vacuum for a short period (depending on the air impermeability of the load surface) in the event of a power failure.

▸ Before each start of operations, ensure that the safety features are in perfect condition (*(> See ch. Inspecting Safety Features)*).

2.10 Technical Condition

If the product is operated while in a defective state, safety and function will be impaired.

- Only operate the lifting device when in perfect working order as originally delivered.
- Follow the maintenance plan *(> See ch. Maintenance)*.
- Use only original spare parts from Uplifter.
- If the operating behavior changes, check the device for faults. Rectify faults immediately!
  If the fault cannot be rectified immediately, shut down the device and mark it as defective.
- Do not independently modify or alter the lifting device.
- Safety features must not be disabled under any circumstances.

Uplifter assumes no liability for consequences of modifications over which it has no control.

2.11 Responsibility of the Operating Company

The operating company is also responsible for third parties in the working area of the lifting device. The operating company must ensure that they have the appropriate qualifications and skills.

- Ensure that regular breaks are taken.
- Ensure that the product cannot be started up by unauthorized persons.
- Ensure that the product cannot be used during maintenance or maintenance work.
- Clearly define the responsibilities for the various activities performed with the gripper.
- Ensure that these responsibilities are observed.
- During the start of operations or before handling an unknown load, several lifting tests must be carried out to ensure safe operation *(> See ch. Start of Operations)*.

2.12 Country-Specific Regulations for the Operating Company

- Observe the country-specific regulations regarding accident prevention, safety testing and environmental protection.
- Do not use the lifting device until it has been ensured that the hoist (crane, chain hoist etc.) being used to handle it complies with the country-specific regulations and safety provisions.

3 Product Description

3.1 Components

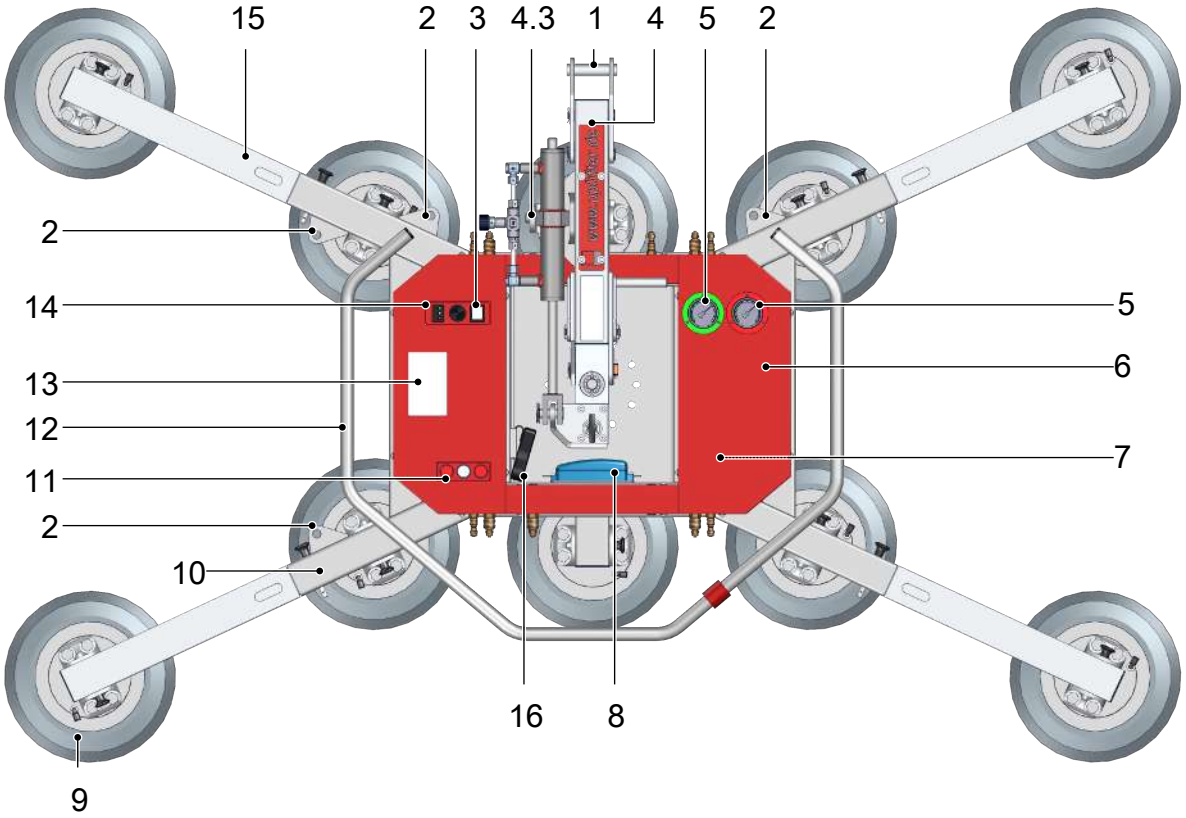

1	Suspension bolt	2	Suspension eye for handling without load arm
3	Main switch	4	Load arm
4.3	Hydraulic cylinder for lowering		
5	Vacuum gauge for circuit 1/circuit 2	6	Device cover
7	Vacuum pump (below the cover)	8	Battery charger
9	Suction plate	10	Base body with load beam
11	Operating panel	12	Operator handle
13	Battery cover	14	Battery display
15	Load beam extension	16	Remote control transmitter

3.2 Operating Elements

3.2.1 Main Switch

The main switch (3) is used to switch the lifting device on and off.

Switch setting for main switch	Function
0	OFF
1	ON
2	Charging mode

3.2.2 Operating Panel

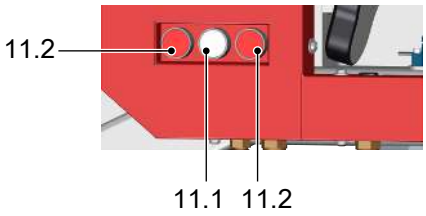

11.1	Gripping the Load	11.2	Release load (press simultaneously)

3.2.3 Remote control (optional)

The radio remote control (optional) makes it possible to maintain a certain safety distance during gripping or releasing. The radio remote control may only be used with visual contact with the lifting device. The buttons on the control panel remain active.

The radio remote control can also be retrofitted on existing devices. See separate assembly instructions.

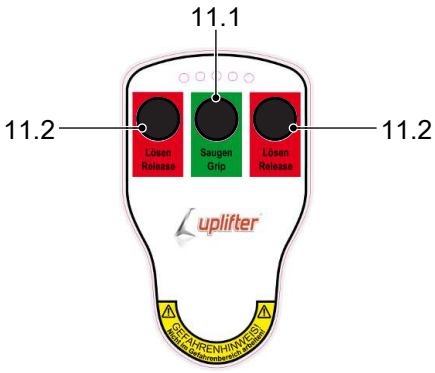

11.1	Gripping the Load	11.2	Release load (press simultaneously)

See the remote control unit's operating instructions in the appendix.

The radio remote control has been tested and complies with the statutory limits for a Class B digital device in accordance with Part 15 of the FCC Regulations. These limits are intended to protect against harmful interference in residential areas. The radio remote control produces, uses and emits high frequencies that may disrupt radio traffic if it is not used in accordance with these instructions. However, there is no guarantee that interference will not occur in a particular installation. If the radio remote control causes radio or TV reception interference when it is switched on and off, we recommend remedying the interference through one or more of the following measures:

- Increase the distance between radio remote control and receiver.
- Consult Uplifter GmbH & Co. KG service or an experienced radio/TV specialist.

3.2.4 Load Arm with Hydraulic Cylinder

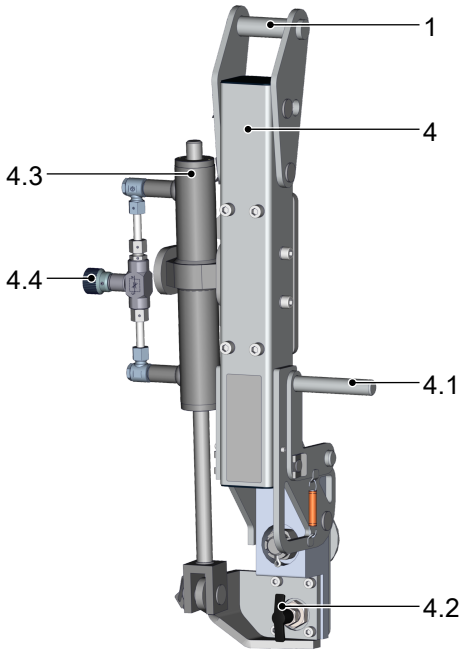

1	Suspension bolt	4	Load arm
4.1	Catch control lever	4.2	T-handle
4.3	Hydraulic cylinder for lowering	4.4	Throttle valve

The load arm is used to attach the lifting device to the hoist and to swivel the load. When working in tight spaces, the load arm can be removed.

The hydraulic cylinder allows you to continuously keep the load at the required swivel angle.

3.3 Vacuum Pump

The vacuum pump (7) is designed for smooth and airtight loads.

In order to save energy, the vacuum generator automatically switches off as soon as a vacuum of -0.7 bar bar is reached. The vacuum generator automatically switches back on once the vacuum sinks below -0.63 bar.

⚠ DANGER

Danger of the load falling due to unauthorized adjustment of the automatic switch-off function of the vacuum generator

Serious injury or death!

- The vacuum generator's automatic switch-off has been optimally set at the factory and may not be adjusted.

3.4 Suction Plates

The suction plates (9) are used to grip loads. The suction plate that is used depends on the load (weight, geometry and surface properties). All suction plates must be applied fully to the load in order to lift it.

3.5 Power Supply

The lifting device is supplied with voltage by a rechargeable 12 V (lead acid) battery.

To charge the battery, the charger must be connected to the mains voltage *(> See ch. Charging the Battery)*.

When the charger is not connected to the power supply, the main switch must be set to 0 to prevent a deep discharge of the battery.

See the charging device's operating instructions in the appendix.

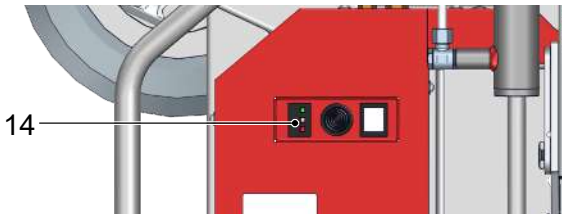

The display (14) shows the battery charge status:

Display	Charge status
RED	The battery is discharged. Safety mode will be activated. The current cycle will continue, but no new cycle must be allowed to start following release. ▸ Charge the battery.
YELLOW	The battery is partially discharged. ▸ Charge the battery.
GREEN	The battery is charged. ▸ The lifting device is ready for operation.

4 Technical Data

4.1 Lifting Device

	With 4 suction plates	With 6 suction plates	With 8 suction plates	With 10 suction plates
Max. lift capacity	400 kg	600 kg	800 kg	1000 kg
Weight	Approx. 100 kg	Approx. 106 kg	Approx. 116 kg	Approx. 126 kg
Minimum size of workpiece	1.3 m x 1.1 m	1.3 m x 1.1 m	2.5 m x 1.6 m	2.5 m x 1.6 m
Device voltage	12 V DC			
Charging voltage and charging current	See charger type plate.			
Operating time	Approx. 8 h			
Medium to be pumped	Air			

Requirements for achieving the maximum lift capacity:

- The maximum lift capacities listed here are based on a vacuum of -0.6 bar.
- The load is airtight.
- All suction plates are covered by the load.

The lift capacity information is valid up to an altitude of 800 m above sea level. The automatic switch-off of the vacuum pump is decommissioned.

Above a height of 1600 m above sea level, the lifting device must not be used as the required operating vacuum cannot be achieved due to the reduced air pressure.

4.2 Vacuum Generation

For technical data, see the type plate on the vacuum generator.

5 Transport and Storage

5.1 Protective Equipment

The following protective equipment is required for handling purposes:

- Protective work shoes in safety class S1 or higher
- Sturdy work gloves in safety category 2231 or higher
- Industrial helmet in accordance with EN 397

5.2 Checking the Delivery

The scope of delivery can be found in the order confirmation. The weights and dimensions are listed in the delivery notes.

1. Compare the entire delivery with the supplied delivery notes to make sure nothing is missing.
2. Damage caused by defective packaging or occurring in transit must be reported immediately to the carrier and Uplifter.

⚠ CAUTION

Battery damaged during transport

Risk of explosion due to sparks or open fire.

Danger of chemical burns due to acid discharge.

- Keep sparks and open fire away from the lifting device.
- Have the battery replaced by qualified personnel only.
- Wear acid-resistant work gloves.
- Wear eye protection.

5.3 Transporting the Lifting Device

The lifting device must be transported only by persons that are authorized and qualified for transportation with lifting devices or forklift trucks.

⚠ WARNING

Falling objects during handling

Serious injury or death!

- Ensure the lifting aids and slings used have the necessary specifications.
- Secure the components according to national regulations before every handling operation.

⚠ WARNING

Severe injury or death due to falling objects.

- Before each handling operation, make sure that no people are in the danger zone.
- Make sure that there are no loose objects on the lifting device.

5.4 Storing the lifting device

If the lifting device is not used for an extended period, it must be stored correctly to protect it from damage. Options for correct storage:

- Let the lifting device hang close to the ground.
- Detach the lifting device and place it in storage.

NOTE

Damage to suction plates due to inappropriate storage position!

- Do not set the lifting device down on the suction plates.

NOTE

The effects of ozone, light (especially UV), heat, oxygen, humidity as well as mechanical influences can reduce the service life of rubber products.

Damage to the suction plates due to incorrect storage!

- You must store rubber parts such as suction cups and suction plates in a cool place (0° C to +15° C, max. 25° C) that is dark, dry, low in dust and that offers protection from the weather, ozone and drafts. They should also be free of tension (e.g. stacked appropriately to avoid deformation).

1. Store the lifting device so that it is protected from the weather.
2. Store the lifting device in a well-ventilated, frost-free area.

6 Installation

6.1 Safety

6.1.1 Safety Instructions for Installation

The lifting device must be installed and maintained only by qualified specialist electricians and mechanics.

⚠ WARNING

Improper mounting

Serious injury or death!

- Carry out mounting and removal only when the device is in an idle, depressurized state.
- Ensure that the lift capacity of the hoist (crane, chain hoist, lifting tackle, etc.) is at least equal to the sum of the lifting device's weight and lift capacity.
- Ensure that the hoist is in perfect working order.
- Hang the lifting device only from the suspension bolt (1).

6.1.2 Protective Equipment

The following protective equipment is required to install the crane system and for troubleshooting, maintenance, and repair work:

- Protective work shoes in safety class S1 or higher
- Sturdy work gloves in safety category 2231 or higher
- Where applicable, fall protection personal protective equipment (fall protection PPE)

6.2 Fastening the Lifting Device

⚠ CAUTION

Lifting or setting down the device with a locked load arm can damage the lifting device.

Risk of injury from falling load!

- Never lift or set down the load in a horizontal position with a locked load arm.

1. Position and engage the load arm *(> See ch. Lifting the Load)*.
2. Close the throttle valve to lock the hydraulic cylinder.
3. Ensure that the lift capacity of the hoist (crane or chain hoist) is at least equal to the sum of the lifting device's weight and lift capacity (refer to the type plate).
4. Hang the lifting device UPG from the suspension bolt (1).

6.3 External Enable Signal for Releasing the Load

The lifting device has an interface that can be used to connect an external module (e.g. a counterweight beam). An external, potential-free limit switch can be connected to the socket (10.1). As long as the limit switch remains open (e.g. while working with the counterweight beam), it will not be possible to release the load. On delivery, the socket is bridged using a plug (10.2); this ensures that the load can be released during normal operation.

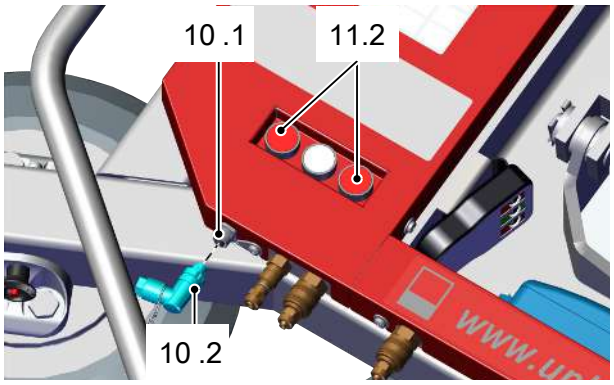

When the socket (10.1) is not bridged by the plug (10.2), the buttons used to release the load (11.2) will be disabled.

Socket PIN assignment:

- Pin 1 = 12 V DC
- Pin 2 = Signal In

6.4 Start of Operations

1. Check that all screws are securely fastened.
2. Check that the vacuum system is free of leaks *(> See ch. Checking the Lifting Device for Leaks)*.
3. Check all functions of the lifting device:
   - ⇨ Grip load
   - ⇨ Release load
   - ⇨ Swivel
   - ⇨ Rotate
4. Perform several lifting tests with one load.

Lifting tests: The installation is complete if the following conditions are met:

- After a power failure, the load is held for at least five minutes.
- The load to be lifted is sufficiently rigid so that it cannot be damaged during gripping and handling.

The checks required in Europe before the start of operations in accordance with DIN EN 13155 are covered by a type test.

See also

Checking the Lifting Device for Leaks [› 41]

7 Operation

7.1 Safety

7.1.1 Safety Instructions for Operation

⚠ WARNING

Falling objects

Serious injury or death!

- Before each handling operation, make sure that no persons are in the danger zone.
- Never transport loads above people.
- Observe the maximum lift capacity (see the type plate and lift capacity sticker).
- Make sure there are no loose objects on the load.
- Do not store loads in a suspended position.

⚠ CAUTION

The surface of the load is dusty, dirty, oily, damp or icy.

Risk of injury from falling load!

- Before any handling, ensure that the surface of the load is clean, dry and free of ice.

⚠ CAUTION

Damaged load

Risk of injury from falling load!

- Before handling, make sure that the load is sufficiently rigid.
- Make sure that the load is not damaged close to where the suction plates are going to grip it.

✓ The main switch is set to 1 during the entire handling process.

1. Keep an eye on the vacuum gauges.
2. Check the charge level of the battery.

7.1.2 Personnel Qualifications

- The operating staff have been instructed in the operation of the lifting device and have read and understood the operating instructions.

7.1.3 Protective Equipment

The following protective equipment is required to operate the device:

- Protective work shoes in safety class S1 or higher
- Working gloves sturdy enough for the load
- Industrial helmet in accordance with EN 397
- Closely fitting clothing
- A hairnet, if necessary

⚠ CAUTION

High noise level due to leaks between load and suction pad

Hearing damage!

- Measure the noise level with typical loads.
- Depending on the load surface, noise levels may occur that require hearing protection.

7.1.4 Using the Lifting Device Properly

Improper use of the lifting device can endanger the operator and damage the product.

- The handling process must not be assisted or hindered by additional external means or forces.
- Do not lift, drag or pull loads at an angle.
- Do not use the lifting device to free stuck loads.
- Avoid rocking the load.
- Never handle a load with more than one lifting device.
- Always lower the load before taking longer breaks.

Always guide and handle the lifting device at an ergonomic working height.

7.1.5 What to Do in an Emergency

⚠ CAUTION

Risk of injury due to emergency situation!

- Immediately inform all persons in the vicinity of the danger zone.
- Do not enter the danger zone.
- If possible, set down the load safely.

The following situations constitute an emergency:

- Vacuum generation fails, e.g. due to power failure.
- Leakage occurs, e.g. due to a detached hose.
- A collision occurs.
- During handling below the minimum vacuum level of -0,6 bar, the vacuum falls into the red section of the gauge.
  - This also applies to lifting devices with two redundant vacuum circuits.

Before recommencing work with the lifting device:

- Determine and eliminate the cause of the vacuum generation failure.

7.2 Checks before Starting Work

1. Ensure that the battery is charged (see Charge level indicator).
2. Check safety features *(> See ch. Checking Safety Features)*.
3. Make sure all latching bolts and securing bolts are engaged.
4. Visually inspect all load-bearing screw unions.
5. If necessary, clean the vacuum connections and sockets to prevent leaks.
6. Remove the protection covers from the suction plates.

7.3 Adjusting the Position of the Suction Plates

⚠ DANGER

Two vacuum circuits: Falling load due to unauthorized replacement of the suction plates

Serious injury or death!

✓ The even distribution of the suction plates of both vacuum circuits is a prerequisite for safe handling.

▸ Suction plates from different vacuum circuits must not be interchanged.

The vacuum connections (9.2) of both vacuum circuits differ in size so that the redundant two-circuit system cannot be deactivated.

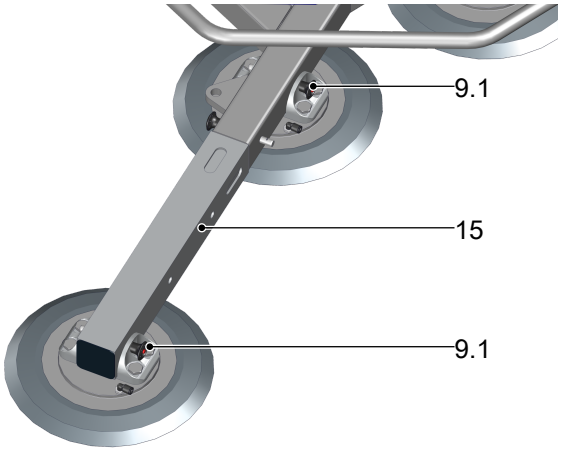

1. Press the red button on the back of the latching bolt (9.1) and pull out the latching bolt.
2. Slide the extension (15) or the suction plate into the desired position.
3. Slide the latching bolt (9.1) into the catch lever until the retaining pawls engage.
4. Check the vacuum connections.

7.4 Arrangement of Suction Plates

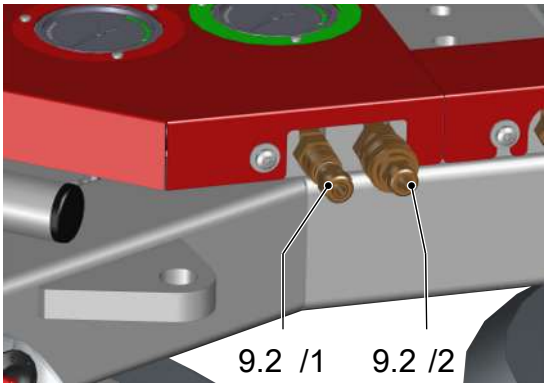

9.2/1	Connection for vacuum circuit 1 (red)	9.2/2	Connection for vacuum circuit 2 (green)

The suction plates of the two vacuum circuits must be arranged so that if a vacuum circuit fails, the load cannot fall.

The vacuum connections (9.2) of both vacuum circuits differ in size so that the redundant two-circuit system cannot be deactivated.

- Always keep the hose couplings and sockets clean to prevent leaks.

The images below show how the suction plates can be arranged.

With 4 suction plates	With 6 suction plates
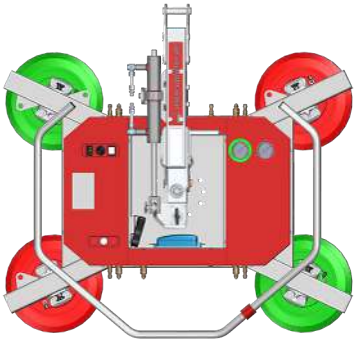	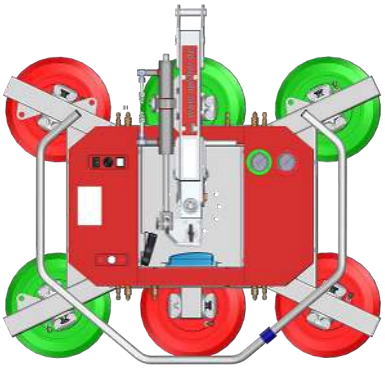
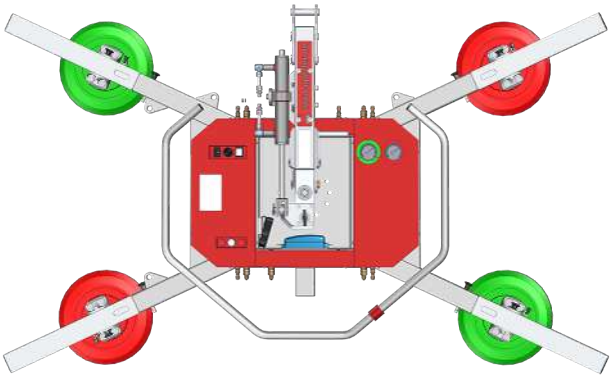	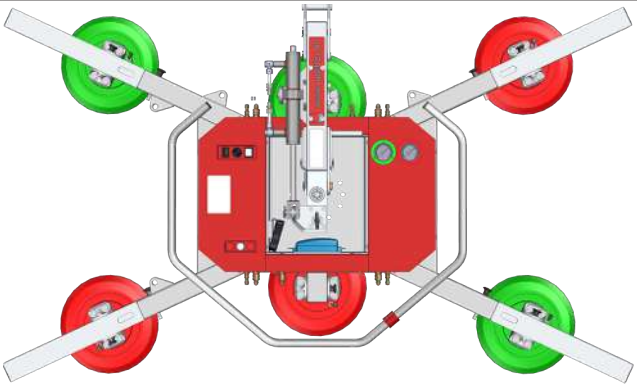

With 4 suction plates

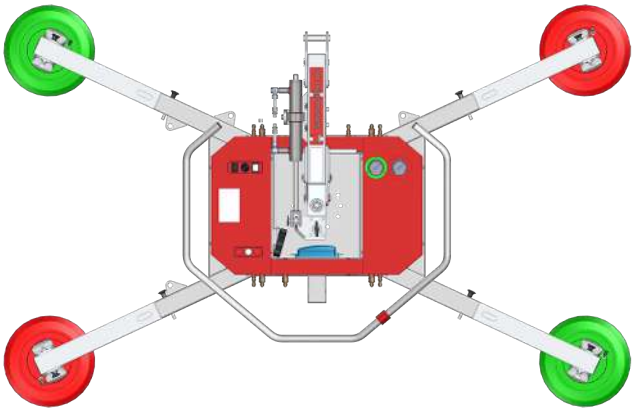

With 6 suction plates

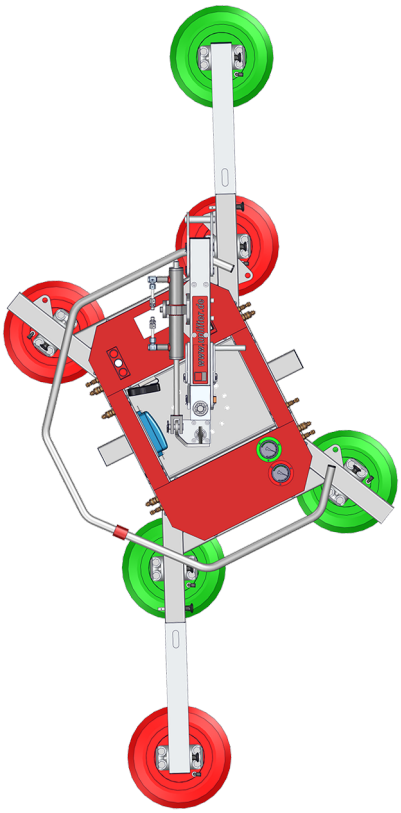

With 8 suction plates

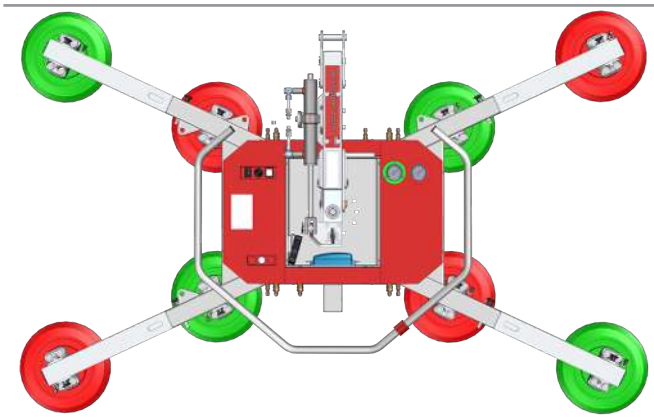

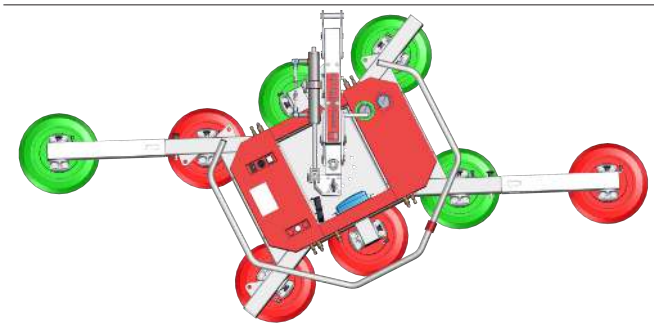

With 10 suction plates

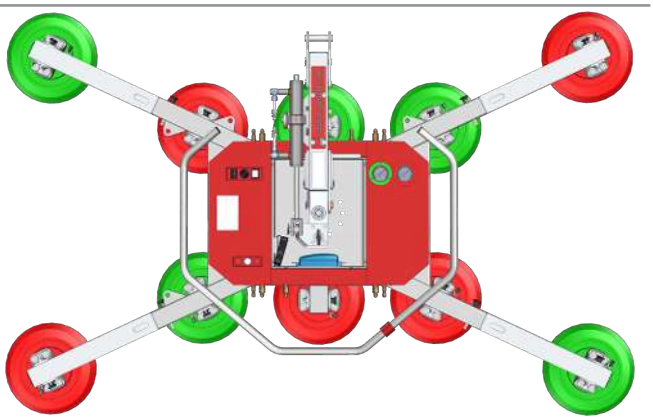

7.5 Working Without a Load Arm

In very narrow assembly conditions, the load arm can be removed to reduce the overall height of the lifting device.

In this case, the rotate and swivel functions are not available. The device is attached to the crane using a shackle and load strap or chain.

7.5.1 Removing the Load Arm

1. Remove the retaining split pin (4.5) from the castellated nut (4.6).

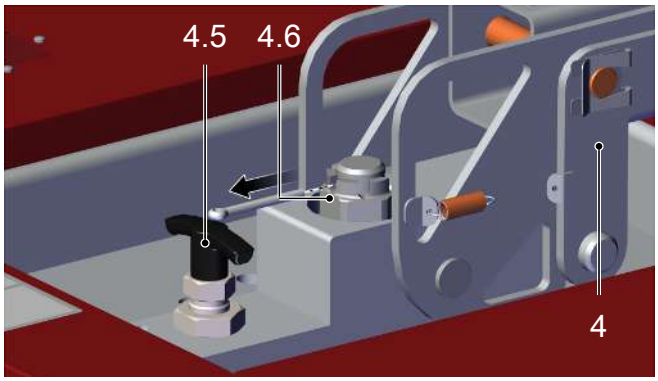

2. Unscrew the castellated nut (4.6) from the bolt.

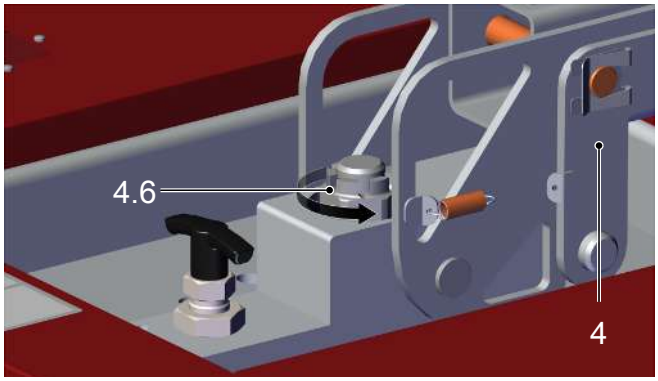

3. Pull off the load arm (4) with the bearing block in the direction of the arrow.

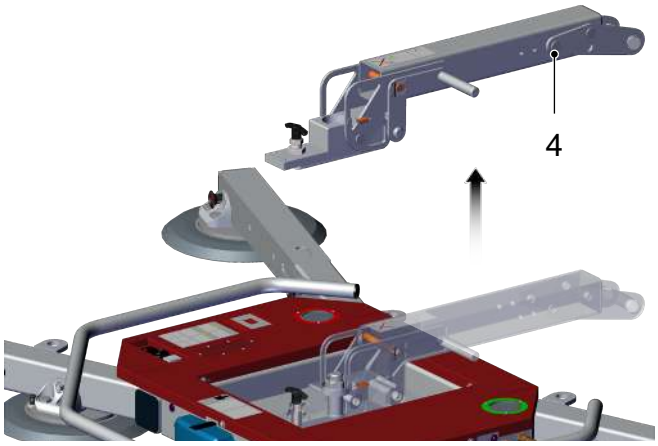

⇨ The load arm (4) is removed.

7.5.2 Suspending the Lifting Device from Shackles

The base body (10) has four suspension eyes (2). The lifting device may only be attached to two suspension eyes (see the figure).

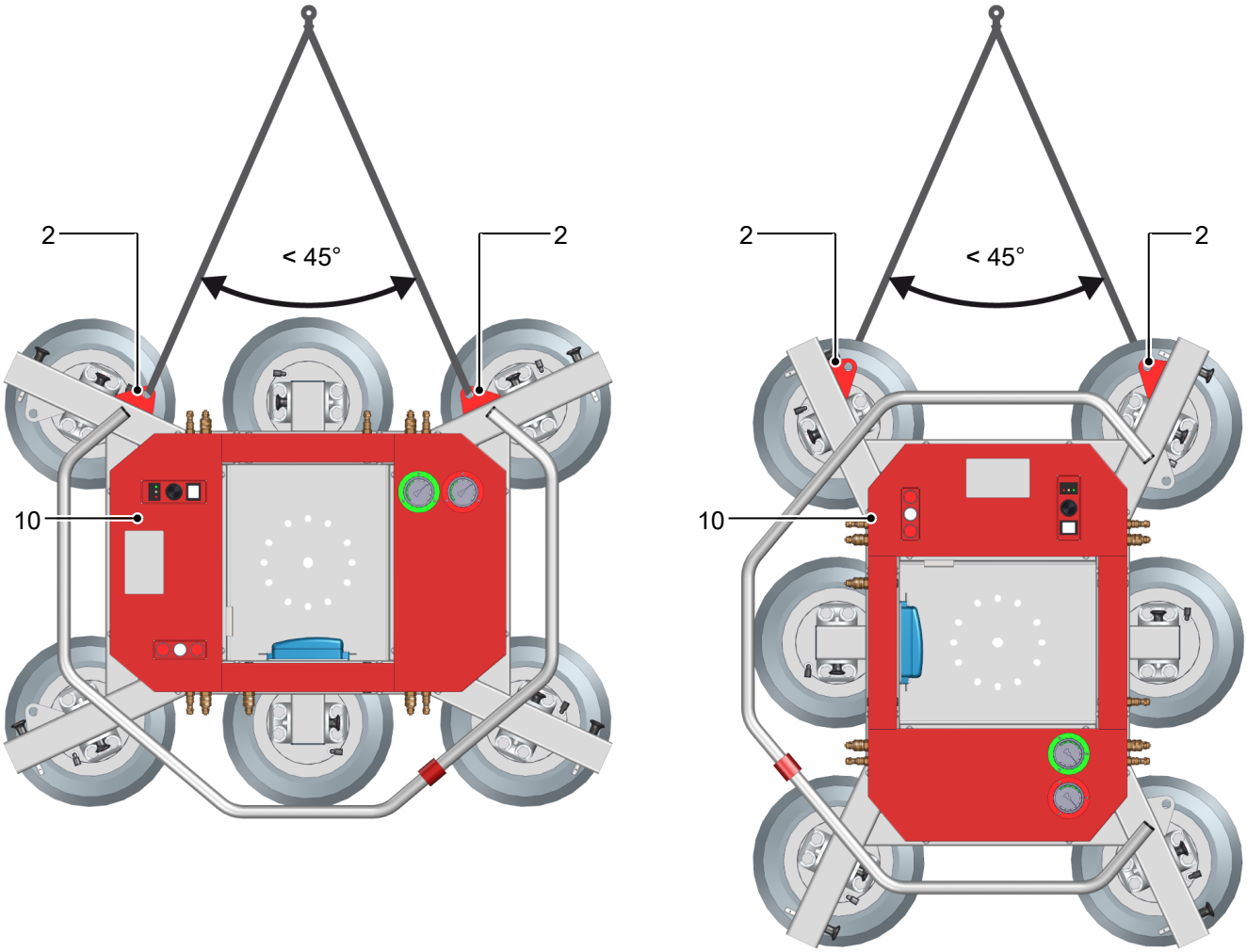

1. Hang the shackles on two opposite suspension eyes (2).
2. Make sure that the angle between the load straps or chains does not exceed 45°.

7.5.3 Attaching the Load Arm

(> See ch. Removing the Load Arm).

1. Mount the load arm (4) with bearing block.
2. Tighten the castellated nut (4.6) by hand and then loosen it again by about half a turn.
3. Secure the castellated nut (4.6) with a ***new*** retaining split pin (4.5).

⇨ The load arm is securely attached.

7.6 Gripping the Load

⚠ WARNING

Falling objects due to insufficient vacuum

Serious injury or death!

- Before lifting the load, ensure that the minimum vacuum of -0,6 bar has been attained (warning signal OFF).

⚠ CAUTION

Uncontrolled rotation or swinging motions from adhesion or tilting of the load

Crushing and impact hazard!

- Before lifting, ensure that the load is free and not stuck, tilted or caught.

⚠ CAUTION

Lifting or setting down the device with a locked load arm can damage the lifting device.

Risk of injury from falling load!

- Never lift or set down the load in a horizontal position with a locked load arm.

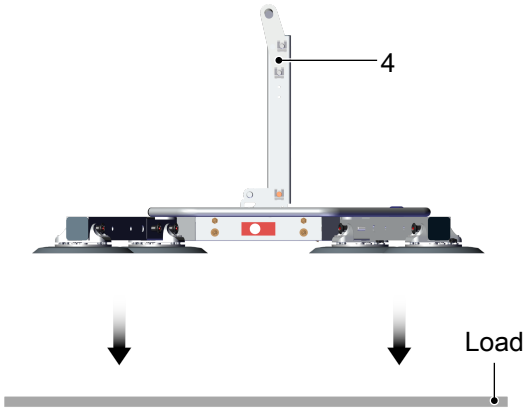

Horizontal load

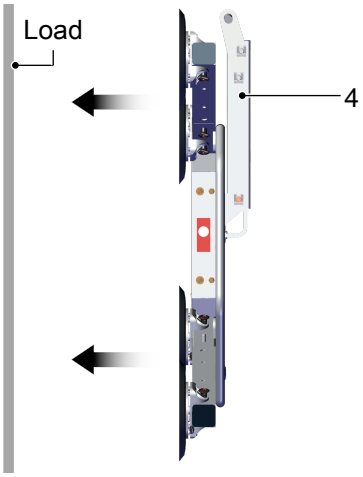

Vertical load

✓ The lifting device is adapted to the size of the load (number of suction plates, length of extensions).

1. Adjust the load arm according to the position of the load:

   Gripping a horizontal load: Unlock the load arm (4) using the control lever (4.1) and place it perpendicular to the load.
   Gripping a vertical load: Swivel the load arm (4) parallel to the load and ensure that it is securely locked.

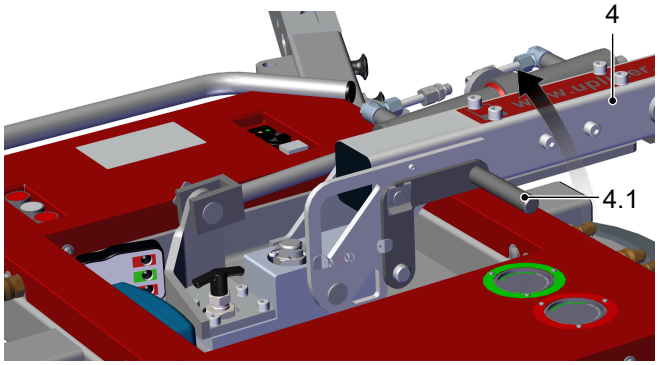

2. Switch on the main switch (3).
3. Position the lifting device horizontally or vertically over the load's center of gravity (+/- 5 cm).
4. Carefully lower the lifting device onto the load.
5. Ensure that all suction plates are completely in contact with the load.

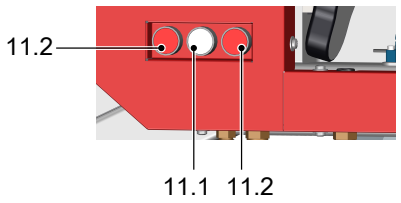

6. Press the (11.1) ***Grip load*** button on the operating panel or radio remote control.

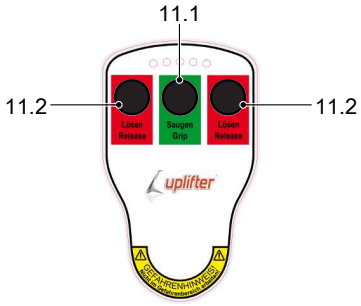

⇨ Suction is applied to the load.

7.7 Handling a Load

✓ The load is gripped.

1. Ensure that only one item is being lifted. Carefully remove any attached parts with a suitable tool before lifting the load further.
2. Observe the gauges. Lift the load only when the minimum vacuum of -0,6 bar has been reached on both gauges (the gauge needle is in the green area).
3. Once the warning signal sounds (vacuum greater than -0,6 bar bar), carefully lift the load (operate the lifting aid in low gear).
4. Compensate for any swinging motion using the operator handle.

⇨ The load can now be rotated, swiveled or transported horizontally.

7.8 Safely Guiding the Lifted Load

⚠ DANGER

Falling objects during handling above 1.8 m

Serious injury or death!

- While handling loads with a lower edge that is above 1.8 m, cordon off the working area.
- Wear an industrial helmet.

⚠ CAUTION

Risk of injury due to collision!

- Walk behind the lifting device in the direction of travel while maintaining the prescribed safe distances.

Observe the following while a load is lifted:

- Never transport loads above people.
- Do not operate unless you have a clear view of the whole working area.
- Keep the lifting device as close to the floor as possible.
- Adapt the travel speed to the conditions and avoid jerky movements.

7.9 Swivel load

⚠ WARNING

Risk of crushing during swiveling

Risk of hand injuries!

- ▸ Do not reach into the lifting device during the swivel operation.

⚠ WARNING

Swiveling the Load

Risk of injury for operators or other persons

- ▸ During handling, always guide the lifting device by the operator handle.
- ▸ Ensure that no persons or objects are in the danger zone.

⚠ CAUTION

Using the swivel and rotate functions simultaneously

Risk of injury due to uncontrolled movement of the lifting device

- ▸ Never use the swivel and rotate functions simultaneously.

The load arm is only locked parallel to the base body.

✓ Swiveling/unlocking is only possible when the load is set down.

1. Grip and set down the load at its center of gravity (11.1).

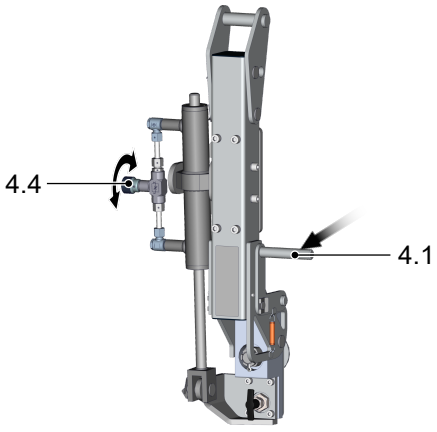

2. Close the throttle valve (4.4) on the lowering cylinder.

3. Pull the catch control lever (4.1).

4. **WARNING! Risk of hand injuries! Do not reach into the lifting device during the swivel operation.**
   Slowly open the throttle valve (4.4).
   ⇨ As its center of gravity has shifted, the load will slowly swivel into a horizontal position of its own accord.
   The swivel operation can be sped up or slowed down by opening or closing the throttle valve.
5. When the swiveling operation has begun, release the catch control lever (4.1).
   ⇨ The control lever (4.1) swivels with spring force into its initial position.
6. Once the load has reached the required swivel angle, fully close the throttle valve.
   ⇨ The load can be transported and stored at the desired swivel angle *(> See ch. Setting Down the Load)*.
7. To swivel the load again, carefully open the throttle valve.
   ⇨ The swivel speed can be regulated using the throttle valve.
8. Swivel the load beam by hand until it reaches the required swivel angle.
9. Once the load has reached the required swivel angle, fully close the throttle valve.

7.10 Rotating the Load

⚠ WARNING

Rotating the load

Risk of injury for operators or other persons

- During handling, always guide the lifting device by the operator handle.
- Ensure that no persons or objects are in the danger zone.

⚠ WARNING

Center of gravity of the load outside the center

Severe injury due to uncontrolled movement of the load while rotating

- Always pick up the load at its center of gravity.
- Do not transport any loads with anything on their surface that can diminish lateral force (release agents, oil, dust, etc.).

⚠ CAUTION

Using the swivel and rotate functions simultaneously

Risk of injury due to uncontrolled movement of the lifting device

- Never use the swivel and rotate functions simultaneously.

✓ The load is gripped and raised so that it can be rotated. *(> See ch. Lifting the Load)*.

1. Pull the T-handle (4.2) in the direction of the arrow and hold it securely.

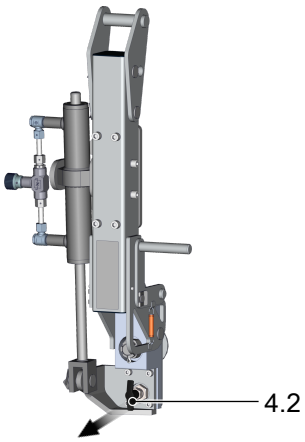

⇨ The load beam (10) is unlocked and can be rotated with the load.

2. Rotate the load beam with the load.

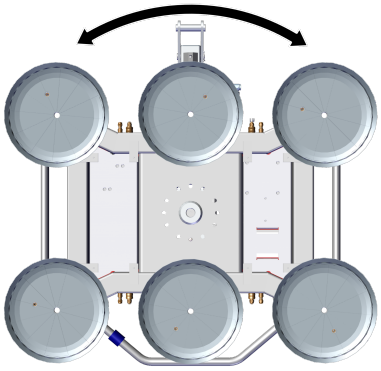

⇨ The load beam can be locked in 30° increments.

7.11 Setting Down the Load

⚠ CAUTION

Residual vacuum on the suction plates

Risk of injury caused by dragging with the load during lifting!

- Only raise the lifting device once the residual vacuum is completely released.
- If necessary, release the sealing lips from the load by hand.

⚠ CAUTION

Lifting or setting down the device with a locked load arm can damage the lifting device.

Risk of injury from falling load!

- Never lift or set down the load in a horizontal position with a locked load arm.

Ensure the following before releasing:

- The load is securely set down and cannot slip or tip.
- The residual vacuum is completely released.

1. Lower the load and place it down securely so that it cannot slip or tilt.

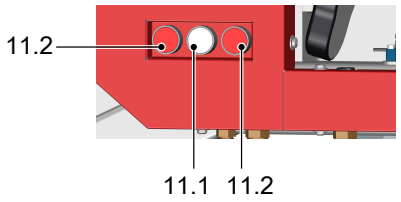

2. Press both **RELEASE LOAD** (11.2) buttons simultaneously on the operating panel or the radio remote control.

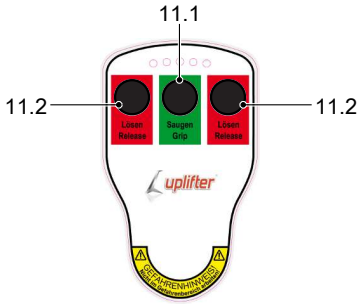

⇨ The load is released.

⇨ Residual vacuum remains.

3. **CAUTION! Do not raise the lifting device until the residual vacuum has been fully removed.** If necessary, release the sealing lips from the load by hand.

⇨ The lifting device can be lifted.

⇨ The lifting device is ready for the next operation.

7.12 Parking the Lifting Device

NOTE

Damage to suction plates due to inappropriate storage position!

- Do not set the lifting device down on the suction plates.

Options for correct parking:

1. Park the lifting device on a storage rack, if present.
2. Hang the lifting device from the hoist in a safe position close to the ground. Ensure that the hoist cannot be used by unauthorized persons.
3. If the lifting device cannot be parked close to the ground, then block off the danger zone underneath it.

For long-term decommissioning, *(> See ch. Decommissioning the Lifting Device)*.

7.13 Charging the Battery

NOTE

Overheating and generation of explosive vapors.

Risk of explosion.

- During charging, ensure that the environment is sufficiently ventilated.

Charge the battery after each use so that the lifting device remains ready for use at all times.

The charger can remain connected continuously.

During the charging process, the lifting device cannot be used.

Charging can be interrupted by unplugging the mains plug.

When the charger is not connected to the power supply, the main switch must be set to 0 to prevent a deep discharge of the battery.

See the charging device's operating instructions in the appendix.

1. Set the main switch to **2**.
2. Plug the battery charger's mains plug into a mains socket.
3. Note the fault light and the 4-level charge status display on the charger.
   ⇨ Illuminated YELLOW: The battery is 80% charged (charging time approx. 8 hours).
   ⇨ Illuminated GREEN: The battery is fully charged.
4. Once charging is complete, unplug the mains plug.
5. Set the main switch to **1**.

⇨ The lifting device is ready for the next operation.

8 Troubleshooting

8.1 Safety

8.1.1 Safety Instructions for Troubleshooting

Faults in the lifting device may only be repaired by qualified mechanics and electricians.

Personnel must have read and understood the operating instructions.

⚠ DANGER

Electric shock from touching live components

Serious injury or death!

- Make sure that the electrical components are not live before installation, maintenance and troubleshooting.
- Switch off the mains switch and secure against unauthorized restart.

⚠ WARNING

Residual vacuum in the vacuum circuit

Risk of injury due to vacuum!

- Deposit the load before troubleshooting or maintenance work.
- Switch off the vacuum generator.
  - ⇨ The vacuum circuit is vented.
- ⇨ The stored residual vacuum slowly drops.

⚠ WARNING

Unexpected movements

Serious injury or death!

- Before working on the lifting device UPG, ensure that the crane cannot move.

⚠ WARNING

Risk of injury due to incorrect maintenance or troubleshooting

- Check the proper functioning of the product, especially the safety features, after every maintenance or troubleshooting operation.

⚠ CAUTION

Hot Surfaces on the Vacuum Generator

Risk of burns!

- Allow the vacuum generator to cool down before carrying out troubleshooting or maintenance work.

8.1.2 Protective Equipment

- The following protective equipment is required for installation, troubleshooting and maintenance work:

- Protective work shoes
- Sturdy work gloves
- Industrial helmet
- Wear acid-resistant work gloves and protective glasses when working on the battery

8.2 Troubleshooting

- If the load cannot be lifted, work through the following list to identify and rectify the fault:

Malfunction	Cause	Solution
Vacuum generator functioning, but the load is not picked up.	Not all suction plates are completely covered by the load. Air is leaking in.	▸ Position the lifting device on the load so that all suction plates are completely covered by the load.
	Dust filter is dirty.	▸ Clean or replace the filter cartridge of the dust filter.
	The filter cartridge is incorrectly inserted.	▸ Check that the filter cartridge is correctly inserted.
	Dust filter is not closed.	▸ Close the dust filter cover.
	Hose or screw unions are leaking.	▸ Replace or seal components.
	Valves are dirty.	▸ Have valves cleaned by Uplifter service.
	The solenoid valve is in the **RELEASE LOAD** position.	▸ Press the green button (11.1).
	The solenoid valve is defective.	▸ Repair or replace the solenoid valve.
	Load beam with extension: An extension vacuum hose is not connected to the vacuum connection.	▸ Connect the vacuum hose.
The load cannot be released.	The solenoid valve is defective.	▸ Repair or replace the solenoid valve.
	The button is defective.	▸ Replace the defective button.
	The socket for the external enable signal (10.1) is not bridged by the plug (10.2).	▸ Bridge the socket using the plug.
	No external enable signal received.	▸ Check the external contact.
Minimum vacuum -0,6 bar is not reached.	Sealing lip on suction plate is damaged.	▸ Replace suction plate.
	Load has cracks, gaps or is porous.	Handling the load with this lifting device is not permitted.
	Gauge is faulty.	▸ Replace the gauge.

Malfunction	Cause	Solution
	Hose or screw unions are leaking.	▸ Seal or replace components.
	Vacuum switch is obstructed or faulty.	▸ Contact Uplifter service.
	Location of use is higher than 1600 m above sea level.	▸ Observe the maximum altitude for location of use.
Warning device is triggered.	Load has cracks, gaps or is porous.	Handling the load with this lifting device is not permitted.
	Sealing lip on suction plate is damaged.	▸ Replace sealing lip.
	Hose or screw unions are leaking.	▸ Seal or replace components.
	Vacuum switch is obstructed or faulty.	▸ Contact Uplifter service.
	Lifting device with battery: Battery voltage too low.	▸ Charge or replace the battery.
The radio remote control (optional) is not working.	The battery is discharged.	1. Charge or replace the battery. 2. See the operating instructions for the radio remote control.
Vacuum generation is not working.	The main switch is not on 1.	▸ Set the main switch to 1.
	The fuse is defective.	▸ Check the fuse and replace if necessary.
	The battery is discharged.	▸ Charge or replace the battery.
	The electrical power supply is interrupted.	▸ Check the cabling.
	The vacuum generation is defective.	▸ Check the vacuum generation and, if necessary, contact Uplifter service.
The vacuum pump's automatic switch-off function is not working.	Leaks in the suction system.	Check the suction system for airtightness and repair if necessary.
	Location of use is higher than 800 m above sea level.	At altitudes of higher than 800 m above sea level, the vacuum pump works in continuous operation.
The battery is not charging.	The main switch is not set to 2.	Set the main switch to 2.
The fault light on the charger lights up.	Fault on the charging device.	See the charging device's operating instructions in the appendix.

9 Maintenance

9.1 Safety

9.1.1 Safety Instructions for Maintenance

The lifting device must be installed and maintained only by qualified specialist electricians and mechanics.

Personnel must have read and understood the operating instructions.

⚠ DANGER

Electric shock from touching live components

Serious injury or death!

- Make sure that the electrical components are not live before installation, maintenance and troubleshooting.
- Switch off the mains switch and secure against unauthorized restart.

⚠ WARNING

Residual vacuum in the vacuum circuit

Risk of injury due to vacuum!

- Deposit the load before troubleshooting or maintenance work.
- Switch off the vacuum generator.

⇨ The vacuum circuit is vented.

⇨ The stored residual vacuum slowly drops.

⚠ WARNING

Unexpected movements

Serious injury or death!

- Before working on the lifting device UPG, ensure that the crane cannot move.

⚠ WARNING

Risk of injury due to incorrect maintenance or troubleshooting

- Check the proper functioning of the product, especially the safety features, after every maintenance or troubleshooting operation.

⚠ CAUTION

Hot Surfaces on the Vacuum Generator

Risk of burns!

- Allow the vacuum generator to cool down before carrying out troubleshooting or maintenance work.

9.1.2 Protective Equipment

- The following protective equipment is required for installation, troubleshooting and maintenance work:

- Protective work shoes
- Sturdy work gloves
- Industrial helmet
- Wear acid-resistant work gloves and protective glasses when working on the battery

9.2 Regular Inspections

- Observe the applicable country-specific regulations.
- Comply with country-specific inspection dates.
- Release the lifting device for operation only after approval by the relevant authority.

Inspection label with the last and next inspection date

- The inspector cannot attach the inspection label unless the inspection has been performed successfully.

Valid for Germany: As per Regulation 52 of the German Social Accident Insurance (DGUV) and Rule 100-500, any company operating a crane system with attached vacuum lifting device is obliged to have the system checked by an expert at least once per year.

As a special service within Germany, Uplifter GmbH & Co. KG offers an inspection contract for an annual test with a certificate from an expert. Please refer to the seal of approval attached to the system for more information. We would be happy to provide you with a quotation for this service.

Phone number for Uplifter service: +49 (0) 9433 20499 370.

9.3 Maintenance schedule

Uplifter stipulates the following checks and check intervals. The operator must comply with the legal regulations and safety regulations applicable at the location of use. These intervals apply to single-shift operation. For heavier use, such as multi-shift operation, the intervals must be shortened accordingly.

Maintenance task	Daily	Weekly	Monthly	Every six months	Yearly
Check safety features: • Gauge • Warning device	X				X
Check the charge level of the battery.	X				X
Check that the charging device is working properly.	See the charging device's operating instructions in the appendix.				
Check and clean the sealing lips of the suction plates, replace if worn.		X			X
Clean all dust filters, replace if necessary.		X			X
Check that load-bearing screws are securely fastened.			X		X
Check condition of vacuum hoses. Replace fragile, kinked, leaking vacuum hoses.			X		X
Check the condition of the hose connections.				X	X
Check all load-bearing parts (e.g. suspension) for deformation, wear or other damage.				X	X
Check the suspension bolts for deformation, wear or other damage.					X
Check the legibility of the type and lift capacity plates. Clean if necessary.					X
Check the legibility of the warning signs. Clean if necessary.					X
Is the test label up to date? Observe the applicable country-specific regulations.					X
Check the general condition of the lifting device.					X
The operating instructions are available, legible, and can be accessed by personnel.					X
Check the electrical installation and cable screw unions.					X
Check electrical vacuum generation.	See the vacuum generator operating instructions in the appendix.				

9.4 Inspecting Safety Features

⚠ CAUTION

Risk of injury from falling objects!

- During all suction tests, only apply suction to the load. Do not lift it.

Check the safety features at the start of every shift (if the unit is not operated continuously) or once a week (if operated continuously).

- Take the device out of operation and mark it as defective as soon as a safety feature ceases to function correctly.

9.4.1 Checking the Gauge and Warning Device

Always test the function of the warning device before starting any work.

1. Switch on the main switch (3).
   ⇨ A warning signal sounds until the minimum vacuum of -0,6 bar is reached.
2. If no warning tone sounds, shut down the lifting device and have the warning device checked.
3. Press the **PICK UP LOAD** (11.1) button.
   ⇨ Suction is applied to the load.
   ⇨ Do ***not*** lift the load!
4. Once the vacuum is established, create a leak on the sealing lip.

⇨ When the vacuum falls below the minimum vacuum of -0,6 bar, the warning signal must sound.

- If the lifting device has a second vacuum circuit, repeat this test on the second vacuum circuit.
- The alarm threshold of the warning device is set for the lifting device at the factory. Never adjust the alarm threshold.

- Both gauges must show the same value.

1. If no warning tone sounds, shut down the lifting device and have the warning device checked.
2. If a gauge does not show the values specified above, shut down the lifting device and have the warning device and gauge checked.

9.4.2 Checking Vacuum Hoses and Hose Clamps

1. Check the vacuum hoses for wear.
2. Replace damaged vacuum hoses (chafe marks, breaks, kinks, etc.).
3. Check that the hose clamps are securely attached and tighten if necessary.

9.4.3 Checking the Lifting Device for Leaks

Check the entire lifting device for leaks once a month.

1. Switch on the vacuum generator.
2. **CAUTION! Risk of injury if the vacuum is insufficient! The load could fall.** Grip the load and lift it by a few centimeters.
3. Wait until a vacuum of approx. -0.7 bar is reached.
4. Switch off the vacuum generator.

⇨ The vacuum must not drop by more than 0.1 bar within 5 minutes.

- After testing, release the lifting device from the load *(> See ch. Setting Down the Load)*.

If the vacuum drops at a faster rate:

1. Check the suction plate or sealing lip, hose, hose connections and screw unions for damage and leaks and replace them if necessary.
2. Check the vacuum filter, clean or replace the filter cartridge if necessary.

9.4.4 Check pressure loss at the dust filter

- Check pressure loss at the dust filter. Replace the filter cartridge if the pressure is ≥ 0.2 bar or after 2 years at the latest.

9.5 Cleaning the Dust Filter

⚠ DANGER

Falling load.

If the dust filter is clogged, the warning device will not trigger even though the vacuum at the suction pad is insufficient.

Serious injury or death!

- Depending on the dust load, clean the dust filter at least once a week.

NOTE

When removing the filter cartridge, dust gets into the lines.

Damage to the vacuum generator

- When removing the filter cartridge, ensure that no dust enters the lines.
- Do not knock out the filter cartridge.

✓ The lifting device is positioned on a stable surface.

1. Switch off the main switch (3).

2. Remove the device cover (6).

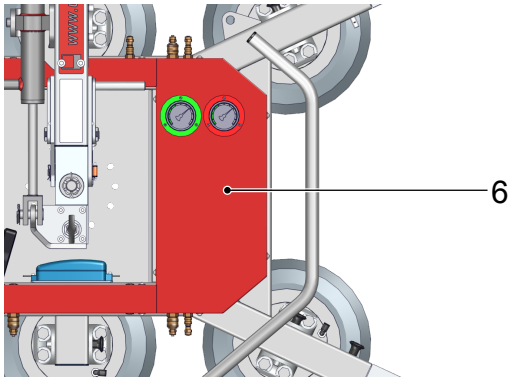

   ⇨ Make sure that the hose connections cannot break off.

3. Open the filter housing (19).

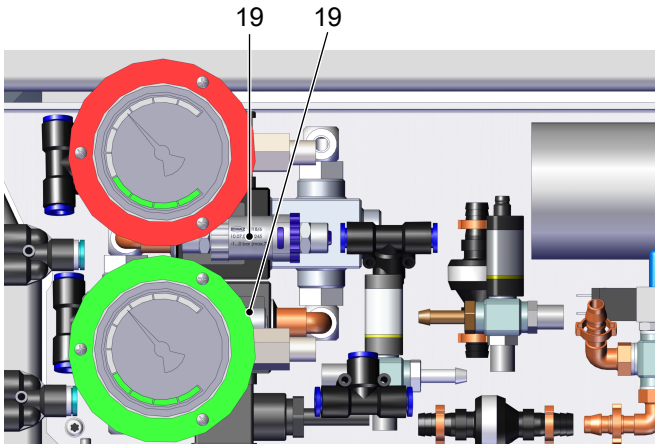

4. Remove the filter cartridge.
5. Blow the filter cartridges clear from the inside to the outside or clean with water.
6. Replace very dirty or damaged filter cartridges.
7. Reinstall the filter cartridges.
8. Close the filter housings.
9. Fit the device cover (6) and secure it using the fastening screws.
10. Check the proper functioning and safety features before recommissioning.

9.6 Cleaning the Lifting Device

Clean UPG lifting devices only with warm, soapy water.

NOTE

Aggressive cleaning agents

Damage to the suction plates and vacuum hoses!

- For cleaning, do not use aggressive cleaning agents such as cold cleaners, carbon tetrachloride, hydrocarbons or vinegar-based cleaning products.
- Do not use sharp-edged objects (wire brushes, sandpaper, etc.).

NOTE

Moisture ingress

Damage to the electronics!

- During cleaning, make sure that no moisture gets into the electronics.

- The suction plates must be cleaned at least once per week with an agent containing active tensides (pH-neutral).
- Also clean mechanically (soft brush or ultrasonic cleaning).
- Allow to dry at room temperature.
- Immediately replace damaged or worn suction plates or sealing lips (e.g. with cracks, holes or corrugation).
  When replacing the sealing lip, make sure that the suction connection is not covered by the sealing lip.
- If your device has multiple vacuum grippers, always replace all suction plates or sealing lips.

9.7 Replacing the Battery

⚠ WARNING

The battery contains dilute sulfuric acid.

Risk of severe chemical burns

- ▸ Wear protective glasses.
- ▸ Wear acid-resistant work gloves.

- ✓ After contact with skin:
- ▸ Clean with soap and water.
- ✓ After inhalation of acid mists:

1. Breathe fresh air.
2. Consult a doctor.

- ✓ After contact with eyes:

1. Rinse under running water for several minutes.
2. Consult a doctor.

- ✓ After swallowing:

1. Drink plenty of water immediately.
2. Swallow activated charcoal.
3. Consult a doctor.

- ✓ After spilling:

1. Absorb spilled acid with a binding agent (e.g. sand).
2. Neutralize spilled acid with lime or soda and dispose of according to local regulations.

✓ The lifting device is positioned on a stable surface.

1. Switch off the main switch (3).

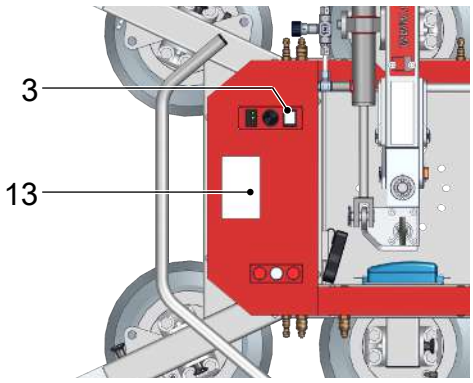

2. Remove the battery cover (13).

   ⇨ Make sure that the hose connections cannot break off.

3. Disconnect the power cables from the battery.

   ⇨ Avoid a short circuit between the poles.

4. Release the hook and loop fastener.
5. Replace the battery (18).
6. Close the hook and loop fastener.
7. Reconnect the power cables.
8. Make sure the poles are not reversed. The positive pole can be identified by the fuse.
9. Fit the battery cover (13) and secure it using the fastening screws.
10. Ensure that the battery is charged (see Charge level indicator).
11. If necessary, charge the battery using the charger *(> See ch. Charging the Battery)*.
12. Dispose of used batteries at a collection point. *(> See ch. Decommissioning and recycling)*.

10 Decommissioning and Recycling

10.1 Safety

The lifting device may only be decommissioned and prepared for disposal by qualified specialists.

10.2 Decommissioning the lifting device

1. Set the main switch to **0**.
2. Set the lifting device down safely.
3. If the lifting device is defective, clearly indicate this on the device.
4. Remove the lifting device from the hoist.
5. Remove the suction plates.
6. If necessary, place a protection cover over all the suction plates.
7. Lay the load arm in a horizontal position and rotate it into the empty corner.
8. Store the lifting device so that it cannot be damaged and secure it to prevent unauthorized use.

If the product is not going to be used for a long period of time, the battery must either be removed and stored in a dry, well-ventilated place, or permanently connected to the charger *(> See ch. Charging the Battery)* (main switch set to **2**).

10.3 Disposing of the lifting device

1. Decommission the lifting device.
2. Detach and dispose of the suction plates.
3. Release the hose clamps and remove the vacuum hoses.
4. Detach and dispose of the vacuum generator in accordance with the operating instructions supplied separately.
5. Detach and dispose of the charging device.
6. Remove the battery and dispose of it, taking into consideration the following notes.
7. Detach and dispose of the base body.

For proper disposal, please contact a company specializing in the disposal of technical goods and instruct the company to observe the applicable disposal and environmental regulations. Uplifter is happy to assist you in finding a suitable company.

NOTE

The battery contains water-contaminating fluids

Danger of environmental damage.

- Dispose of used batteries at a collection point.
- Do not dispose of batteries with the non-recyclable waste.
- Transport batteries upright, secured against tipping over, and secured against short circuits.
- Transport damaged batteries in a suitable container.

11 EC Conformity

EU Conformity Declaration

The manufacturer Uplifter confirms that the lifting device UPG described in these operating instructions fulfills the following applicable EC directives:

2006/42/EC	Machinery Directive
2014/30/EU	Electromagnetic Compatibility
2011/65/EU	RoHS Directive

The following harmonized standards were applied:

EN ISO 12100	Safety of machinery — General principles for design — Risk assessment and risk reduction
EN ISO 13849-1:2015	Safety of machinery - Safety-related parts of control systems - Part 1 General principles for design
EN ISO 13857:2008	Safety of Machinery – Safety distances to prevent hazard zones being reached by upper and lower limbs
EN ISO 2151	Acoustics - Noise test code for compressors and vacuum pumps - Engineering method (grade 2)
EN ISO 4414	Pneumatic fluid power – General rules and safety requirements for systems and their components
EN 1012-1	Compressors and Vacuum Pumps - Safety requirements - Part 1: compressors
EN 13035-1	Machines and plants for the manufacture, treatment and processing of flat glass - Safety requirements - Part 1: Storage, handling and transportation equipment inside the factory
EN 13035-2	Machines and plants for the manufacture, treatment and processing of flat glass - Safety requirements - Part 2: Storage, handling and transportation equipment outside the factory
EN 13155+A2	Cranes - Safety - Non-fixed load lifting attachments
EN 14238+A1	Cranes - Manually controlled load manipulating devices
EN 60204-1+A1+AC	Safety of machinery - Electrical equipment of machines - Part 1: General requirements
EN 61000-6-2+AC	Electromagnetic compatibility (EMC) - Part 6-2: Generic standards - Immunity for industrial environments
EN 61000-6-3+A1+AC	Electromagnetic compatibility (EMC) - Part 6-3: Generic standards - Emission standard for residential, commercial and light-industrial environments
EN 61000-6-4+A1	Electromagnetic compatibility - Part 6-4: Generic standards - Emission standard for industrial environments
EN 300 330	Radio equipment in the frequency range 9 kHz to 25 MHz and inductive loop systems in the frequency range 9 kHz to 30 MHz
EN IEC 63000	Technical documentation for the assessment of electrical and electronic products with respect to the restriction of hazardous substances

Additional technical standards and specifications were applied:

EN 301 489-1	Electromagnetic compatibility for radio equipment and services; Part 1: Common technical requirements

© Uplifter GmbH & Co. KG · EN-US · 30.30.01.02735 · 00 · 10/21 · Subject to technical changes without notice

Contact
Uplifter GmbH & Co. KG
Oberaich 5
92543 Guteneck, Germany
Tel +49 9433- 20499- 0
Fax +49 9433- 20499-29
http://www.uplifter.de
E-mail: info@uplifter.de

Schaltungsunterlagen

Hersteller	J.Schmalz GmbH Johannes Schmalz Str.1 Glatten Deutschland
Anlagenbezeichnung	VacuMaster Glass 1000 Freigabe Lastausgleich
Auftragsnummer	20HS-00025
Zeichnungsnummer	17.01.05.00116
Projekt Beginn	17.02.21
Baujahr	2018
Version / Revision	V.01
Sprache	DE
Projektleiter	TP
Mechanische Konstruktion	TBZ
Elektrische Konstruktion	DLS

Letzte Änderung	25.05.2021	WSCAD Version	6.4.1.6
Letzter Bearbeiter	DLS	Gesamtseitenanzahl	14
Prüfungsdatum	01.07.2021		
Prüfer	ZF-SE		

Diese Zeichnung ist urheberrechtlich geschützt. Eine unerlaubte Vervielfältigung sowie Weitergabe an Dritte verpflichtet zu Schadenersatz und kann strafrechtliche Folgen haben!

				Datum	17.02.21			Deckblatt	Projekt-Nummer	Anlage	=VM
				Bearb.	DLS				20HS-00025	Ort	+
				Gepr.	ZF-SE						
Zustand	Änderung	Datum	Name	Norm	DIN 81346	Ers. f.	Ers. d.			Zeichnungsnummer 17.01.05.00116	Blatt 1 von 14

Technische Daten Schaltanlage

Technische Daten

Betriebsspannungen	:	12V DC
Steuerspannungen	:	12V DC
Frequenz	:	-
Schaltschrank	:	-
Form / TYP	:	-
Art / Leitung	:	H05V-K / H07V-K
Querschnitt	:	min. 0,5mm²
Steuerklemmen	:	Phönix / Push In
Stromklemmen	:	Phönix / Push In

Aderfarben

Hauptstromkreise	:	Schwarz (BK)
Steuerspannung AC ==> 230 VAC	:	Rot (RD)
Nullleiter	:	Hellblau (BU)
Schutzleiter	:	Grün-Gelb (GNYE)
Steuergleichspannung ==>24VDC	:	Dunkelblau (DB)
Steuergleichspannung ==>0VDC	:	Dunkelblau - Weiß (DBWH)
Fremdspannung	:	Orange (OR)

Abkürzungsverzeichnis

VM	:	VacuMaster
CB_1	:	Schaltschrank_1
FFS	:	Funkfernsteuerung

Kennzeichnung Klemmleiste

Beispiel :

+CB1 - X1 : 1.a

- Anschlusskennzeichen
- Objektkennzeichen
- Einbauort

Kennzeichnungsblock

=	Anlage
+	Einbauort
-	Betriebsmittel

BMK-Zusammensetzung

Beispiel :

=GS +CB1 -X1

- Betriebsmittel (Seite Kennbuchstabe Zähler)
- Einbauort
- Anlage

Diese Zeichnung ist urheberrechtlich geschützt. Eine unerlaubte Vervielfältigung sowie Weitergabe an Dritte verpflichtet zu Schadenersatz und kann strafrechtliche Folgen haben!

				Datum	17.02.21		SCHMALZ	Technische Daten Schaltanlagen	Projekt-Nummer 20HS-00025	Anlage	=VM
				Bearb.	DLS					Ort	+CB1
				Gepr.	ZF-SE						
Zustand	Änderung	Datum	Name	Norm	DIN 81346	Ers. f.	Ers. d.			Zeichnungsnummer 17.01.05.00116	Blatt 2 von 14

Definition Mehrstockklemmen

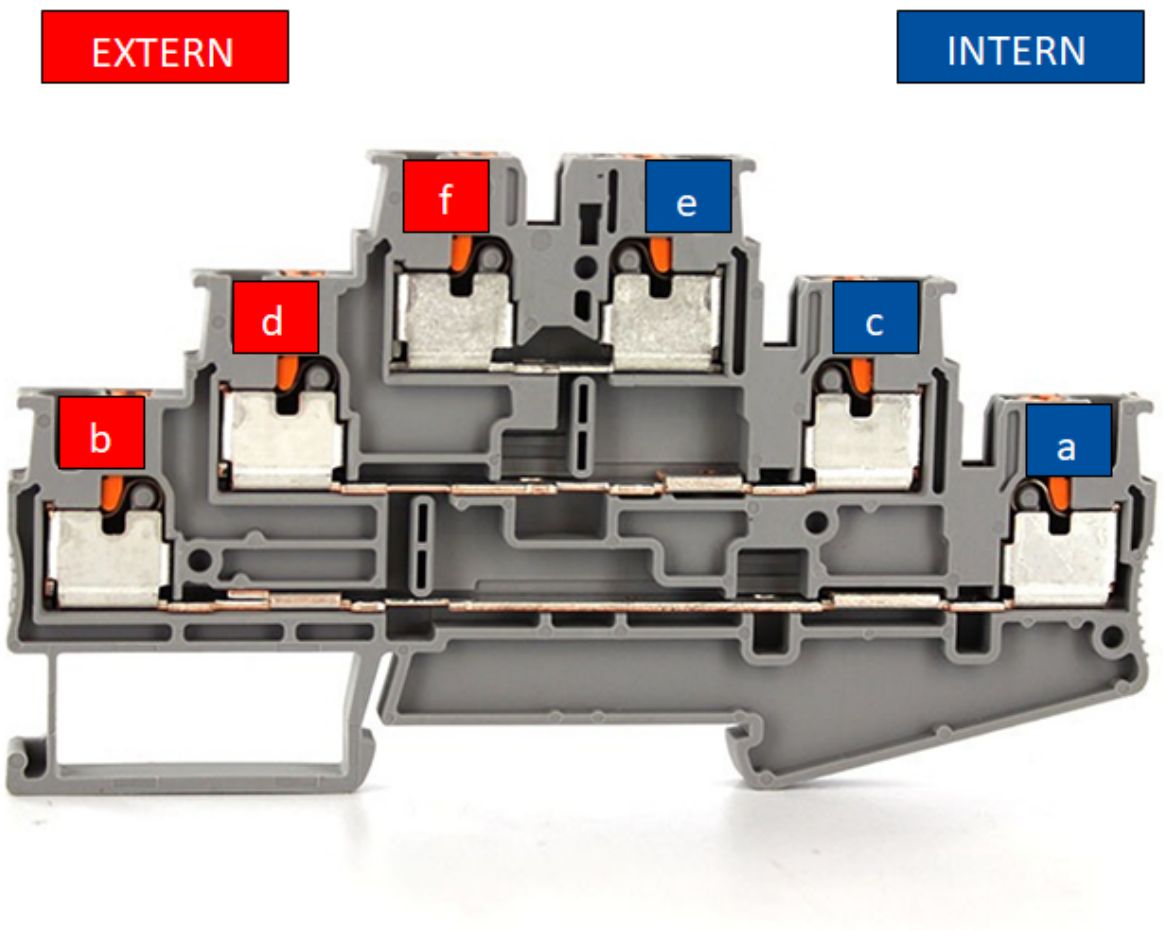

Diese Zeichnung ist urheberrechtlich geschützt. Eine unerlaubte Verwertung/Vervielfältigung sowie Weitergabe an Dritte verpflichtet zu Schadenersatz und kann strafrechtliche Folgen haben!

				Datum	17.02.21		SCHMALZ	Definition Mehrstockklemmen	Projekt-Nummer 20HS-00025	Anlage =VM
				Bearb.	DLS					Ort +CB1
				Gepr.	ZF-SE					
Zustand	Änderung	Datum	Name	Norm	DIN 81346	Ers. f.	Ers. d.		Zeichnungsnummer 17.01.05.00116	Blatt 3 von 14

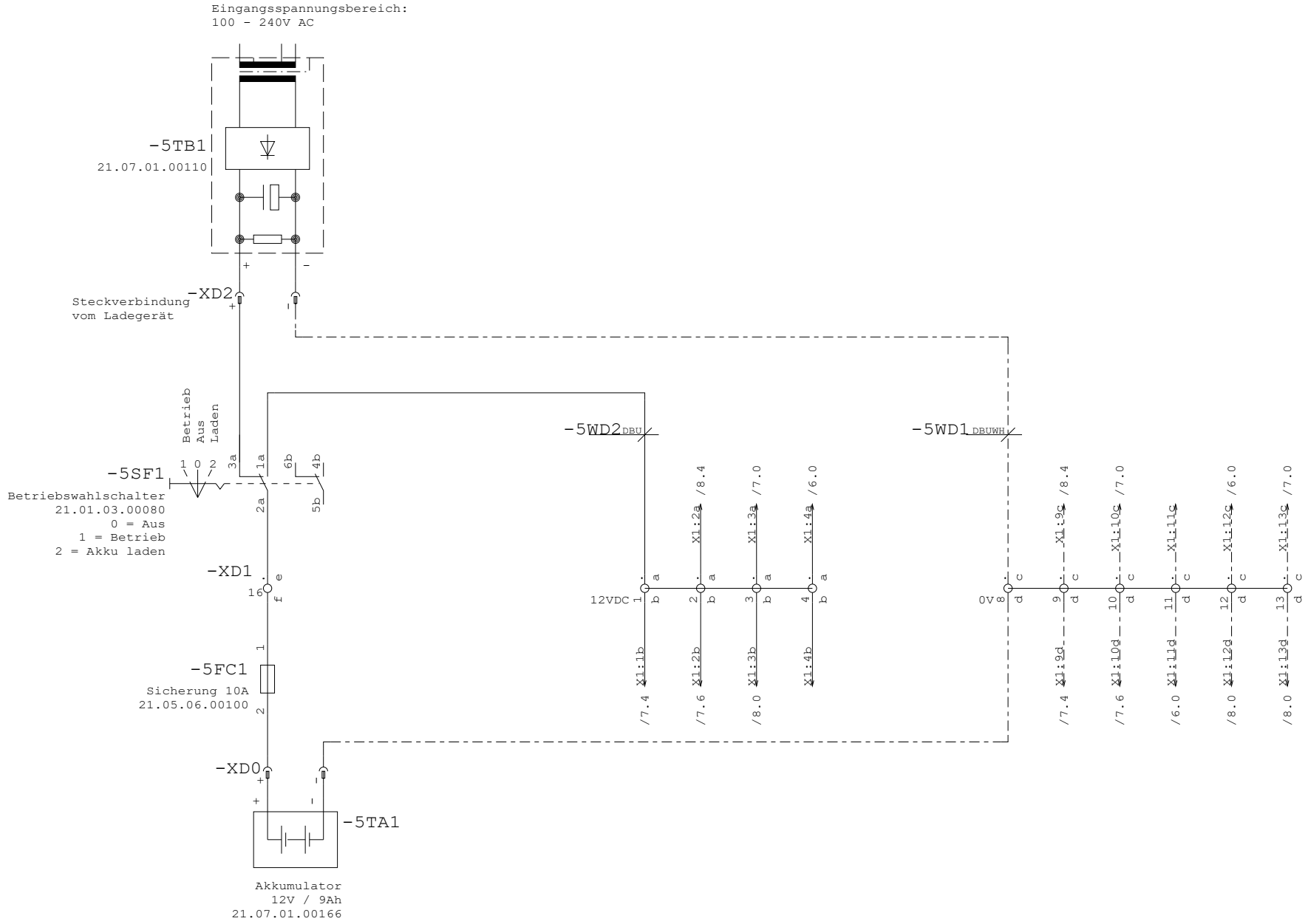

Diese Zeichnung ist urheberrechtlich geschützt. Eine unerlaubte Vervielfältigung sowie Weitergabe an Dritte verpflichtet zu Schadenersatz und kann strafrechtliche Folgen haben!

				Datum	17.02.21		SCHMALZ	Einspeisung	Projekt-Nummer 20HS-00025	Anlage =VM
				Bearb.	DLS					Ort +CB_1
				Gepr.	ZF-SE					
Zustand	Änderung	Datum	Name	Norm	DIN 81346	Ers. f.	Ers. d.		Zeichnungsnummer 17.01.05.00116	Blatt 4 von 14

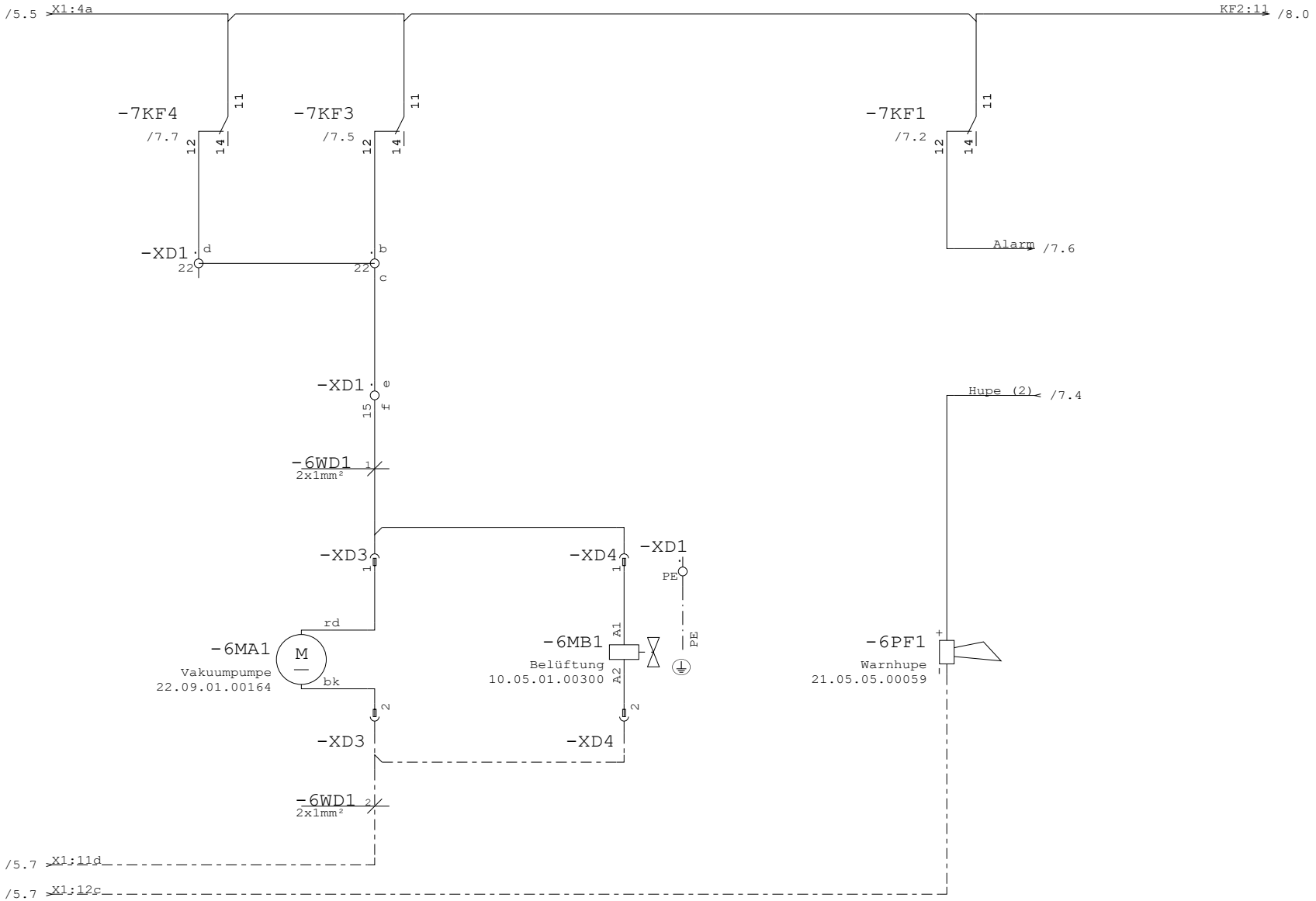

Diese Zeichnung ist urheberrechtlich geschützt. Eine unerlaubte Vervielfältigung sowie Weitergabe an Dritte verpflichtet zu Schadenersatz und kann strafrechtliche Folgen haben!

				Datum	17.02.21		Aktorik	Projekt-Nummer 20HS-00025	Anlage =VM
				Bearb.	DLS				Ort +CB_1
				Gepr.	ZF-SE				
Zustand	Änderung	Datum	Name	Norm	DIN 81346	Ers. f.	Ers. d.		Zeichnungsnummer 17.01.05.00116 / Blatt 5 / von 14

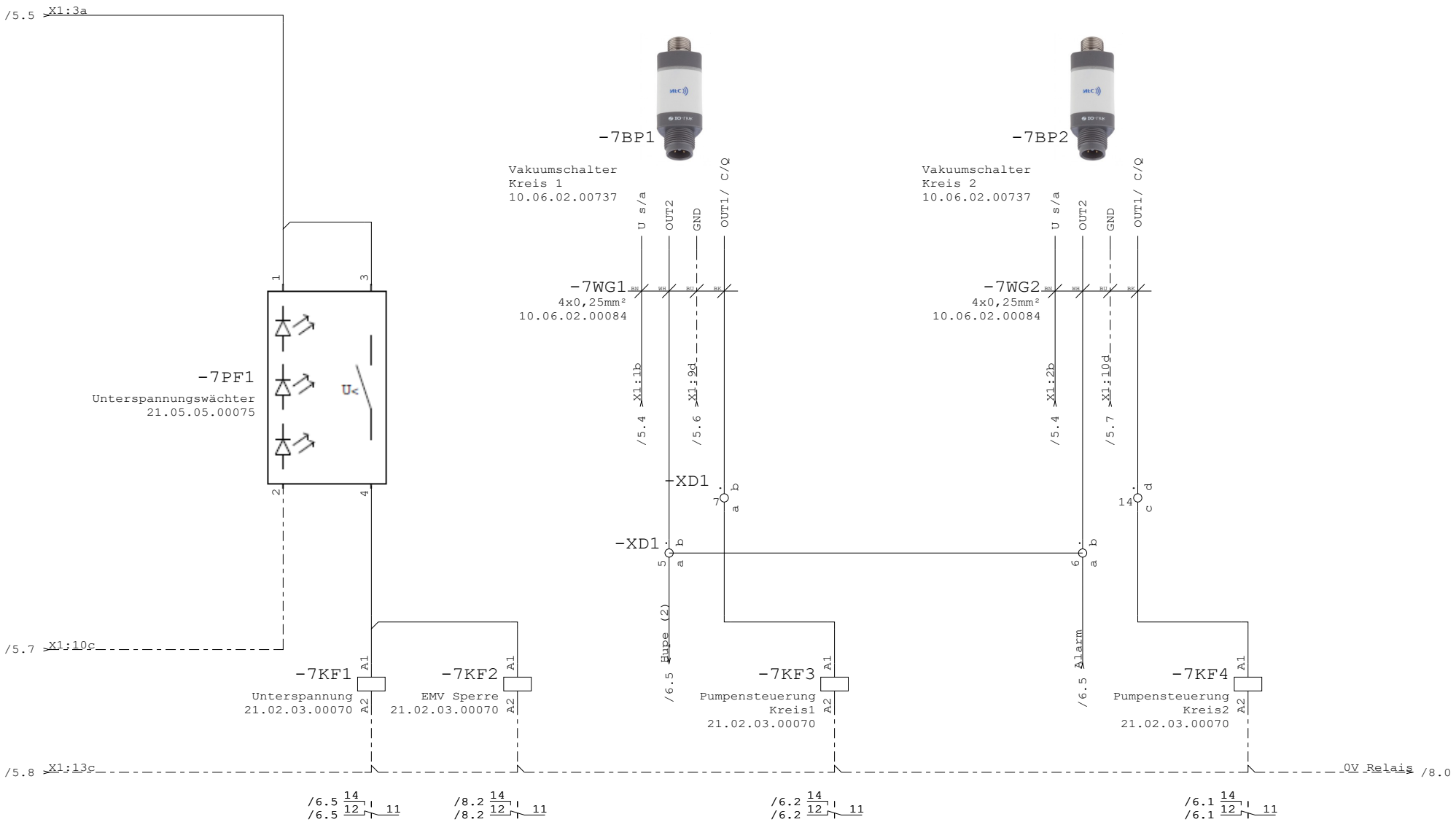

Diese Zeichnung ist urheberrechtlich geschützt. Eine unerlaubte Vervielfältigung sowie Weitergabe an Dritte verpflichtet zu Schadenersatz und kann strafrechtliche Folgen haben!

				Datum	17.02.21			Sensorik	Projekt-Nummer	Anlage	=VM
				Bearb.	DLS				20HS-00025	Ort	+CB_1
				Gepr.	ZF-SE						
Zustand	Änderung	Datum	Name	Norm	DIN 81346	Ers. f.	Ers. d.		Zeichnungsnummer 17.01.05.00116		Blatt 6 von 14

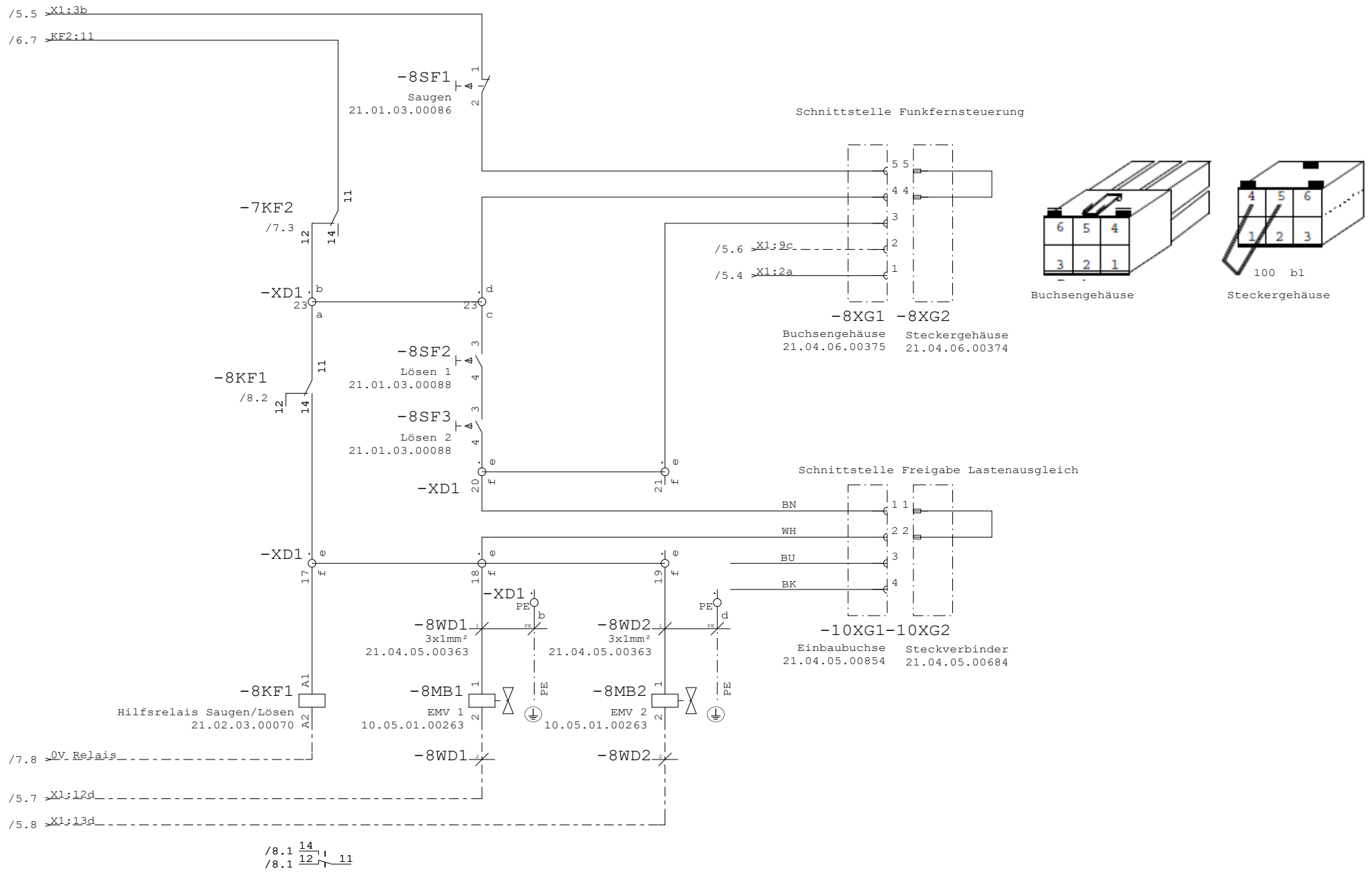

Diese Zeichnung ist urheberrechtlich geschützt. Eine unerlaubte Vervielfältigung sowie Weitergabe an Dritte verpflichtet zu Schadenersatz und kann strafrechtliche Folgen haben!

				Datum	17.02.21		EMV / Schnittstelle FFS	Projekt-Nummer 20HS-00025	Anlage =VM
				Bearb.	DLS				Ort +CB_1
				Gepr.	ZF-SE				
Zustand	Änderung	Datum	Name	Norm	DIN 81346	Ers. f.	Ers. d.	Zeichnungsnummer 17.01.05.00116	Blatt 7 von 14

+FFS

Zusatzoption: Funkfernsteuerung
17.01.05.00059

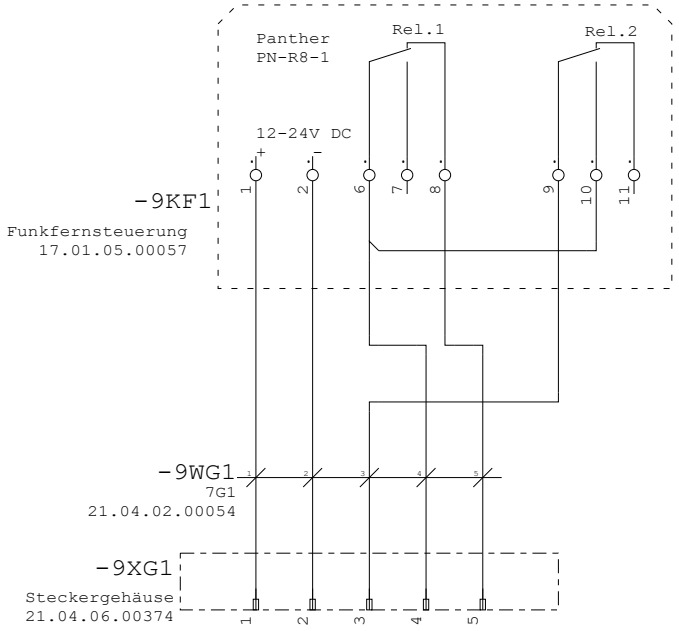

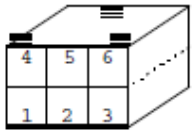

X4 Steckergehäuse

Verschlussstopfen links

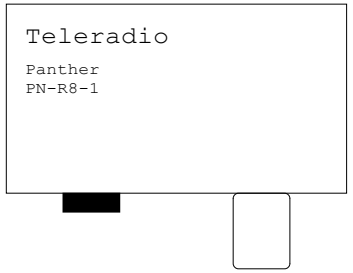

Diese Zeichnung ist urheberrechtlich geschützt. Eine unerlaubte Vervielfältigung sowie Weitergabe an Dritte verpflichtet zu Schadenersatz und kann strafrechtliche Folgen haben!

				Datum	17.02.21		SCHMALZ	Option FFS	Projekt-Nummer 20HS-00025	Anlage =VM
				Bearb.	DLS					Ort +CB_1
				Gepr.	ZF-SE					
Zustand	Änderung	Datum	Name	Norm	DIN 81346	Ers. f.	Ers. d.		Zeichnungsnummer 17.01.05.00116	Blatt 8 von 14

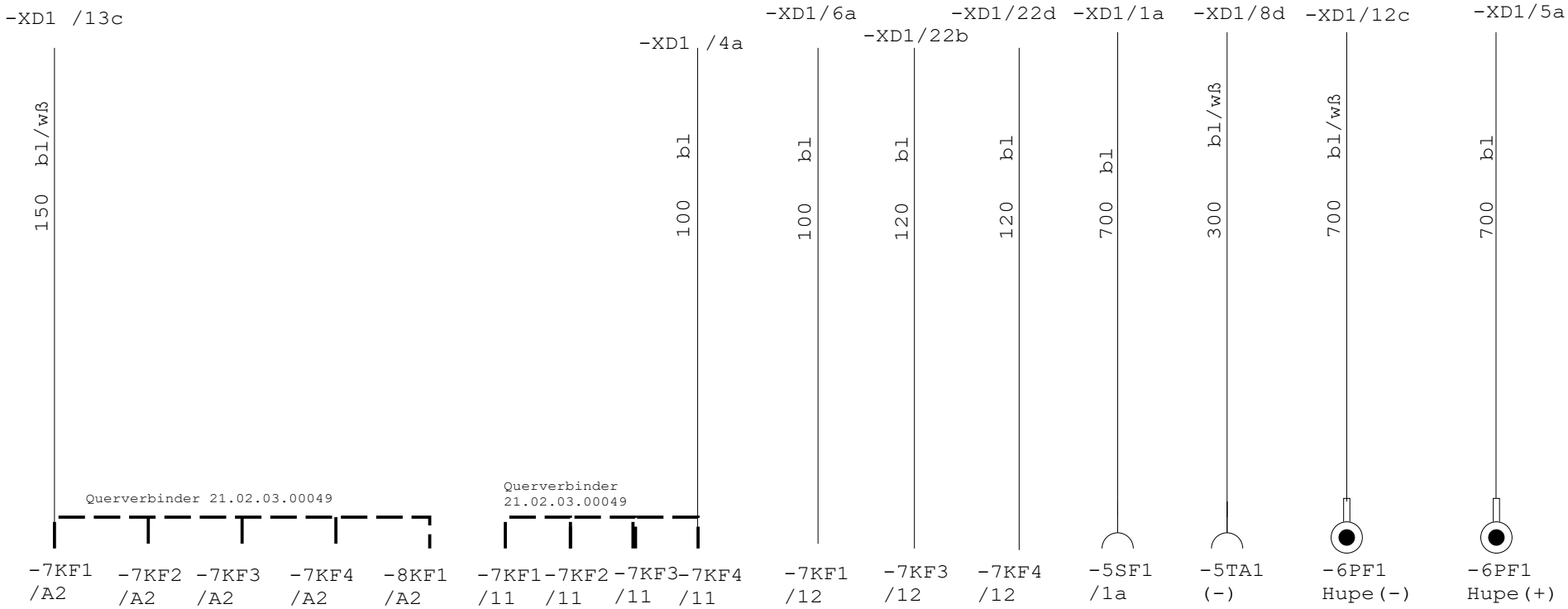

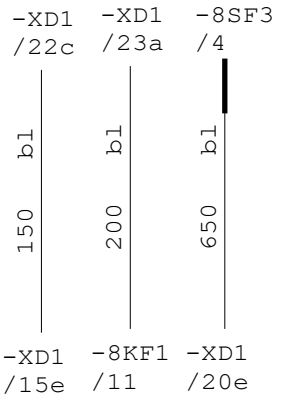

Aderendhülse		
abisoliert ohne Hülse		
Rundsteckverbinder	21.04.05.00060	
Rundsteckverbinder	21.04.05.00061	
Flachsteckhülse	21.04.05.00139	
Flachsteckhülse	21.04.05.00028	
Flachsteckhülse	21.04.05.00187	
Ringkabelschuh M3	21.04.05.00078	
Ringkabelschuh M4	21.04.05.00022	
Sicherungshalter	21.05.06.00100	

Diese Zeichnung ist urheberrechtlich geschützt. Eine unerlaubte Vervielfältigung sowie Weitergabe an Dritte verpflichtet zu Schadenersatz und kann strafrechtliche Folgen haben!

				Datum	17.02.21		Projekt-Nummer	Anlage	=VM
				Bearb.	DLS	SCHMALZ	20HS-00025	Ort	+CB_1
				Gepr.	ZF-SE				
Zustand	Änderung	Datum	Name	Norm	DIN 81346	Ers. f.	Ers. d.	Zeichnungsnummer 17.01.05.00116	Blatt 10 von 12

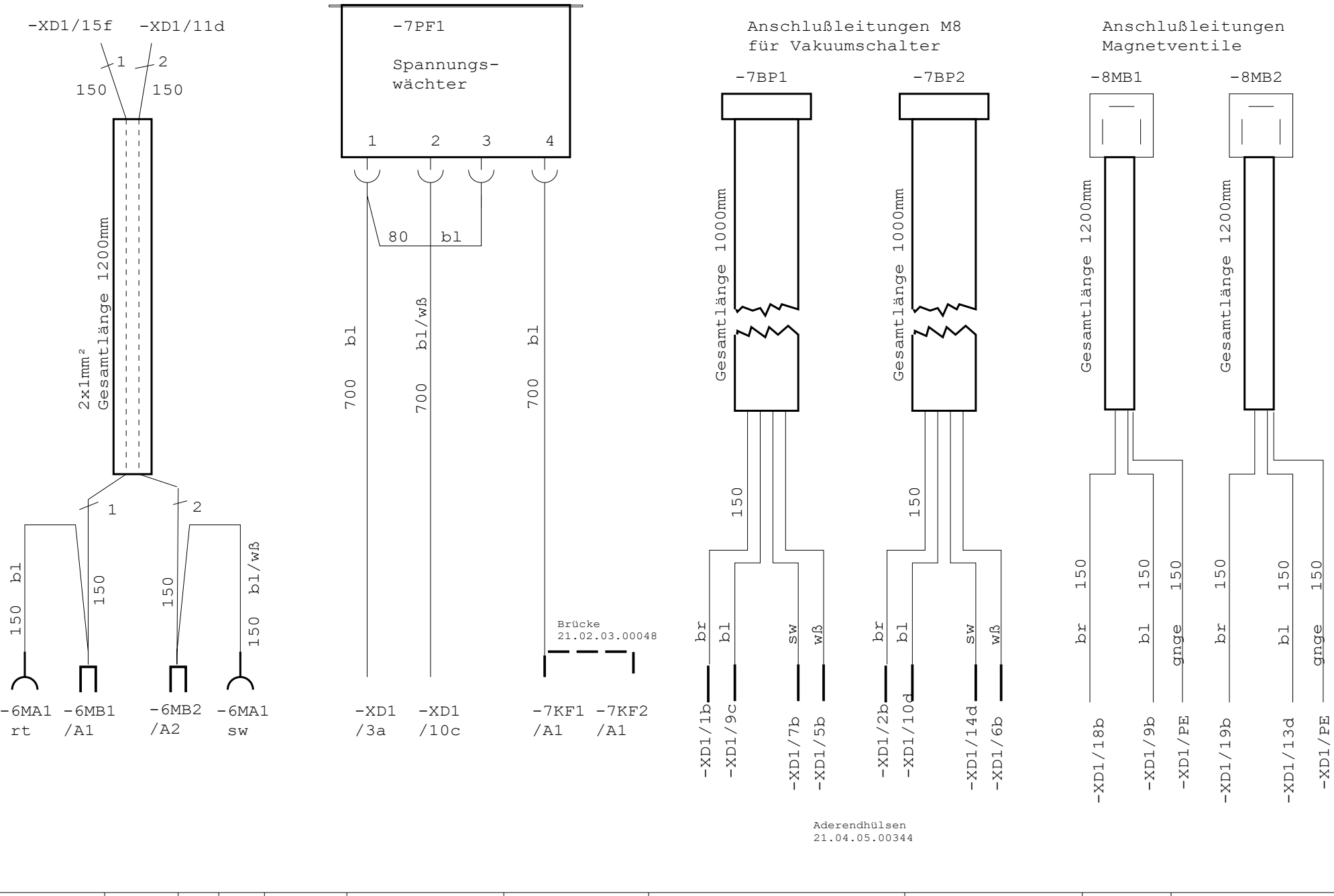

Diese Zeichnung ist urheberrechtlich geschützt. Eine unerlaubte Verwertung sowie Weitergabe an Dritte verpflichtet zu Schadenersatz und kann strafrechtliche Folgen haben!

				Datum	17.02.21		Projekt-Nummer	Anlage	=VM
				Bearb.	DLS		20HS-00025	Ort	+CB_1
				Gepr.	ZF-SE				
Zustand	Änderung	Datum	Name	Norm	DIN 81346	Ers. f.	Ers. d.	Zeichnungsnummer 17.01.05.00116	Blatt 11 von 12

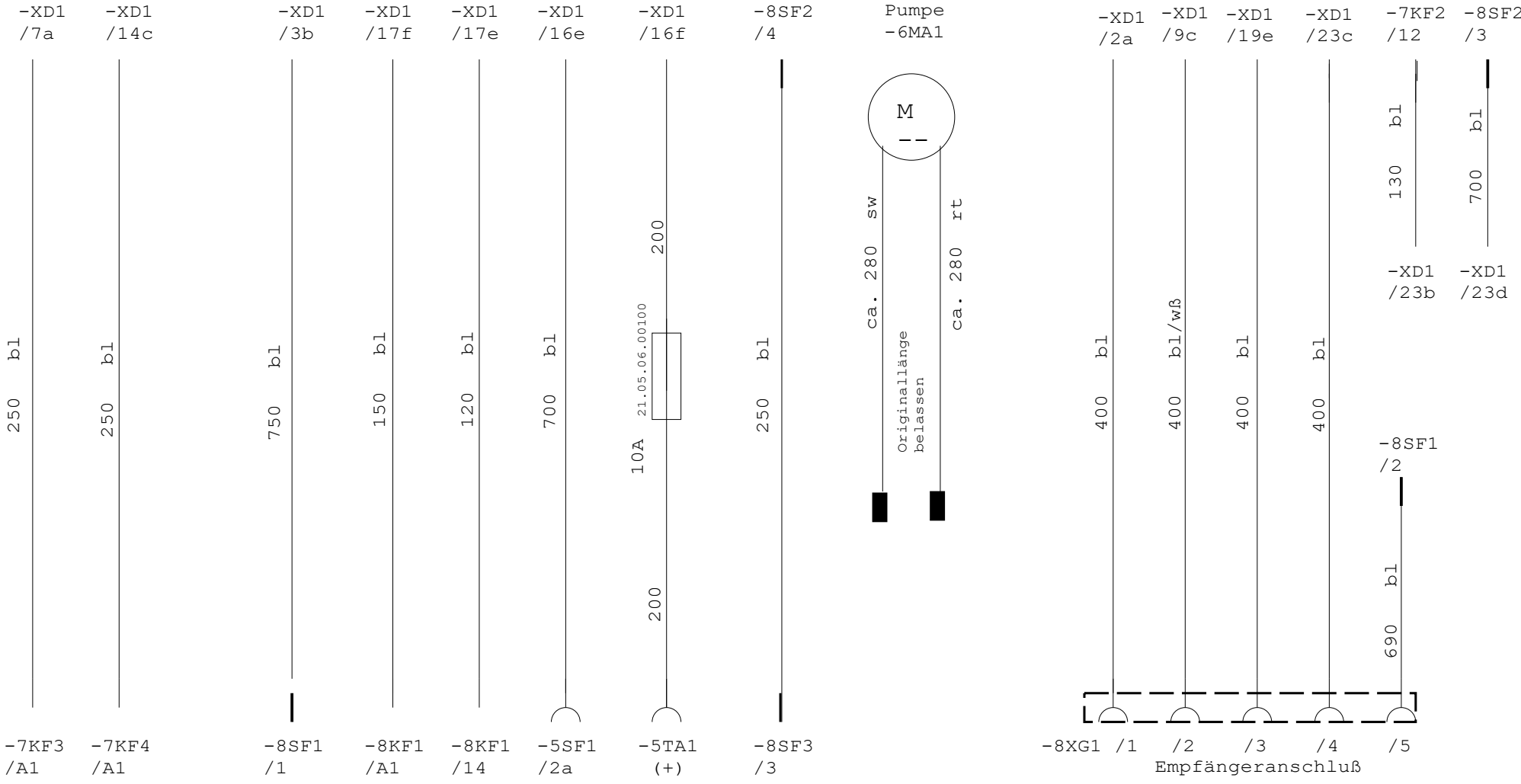

Anschlüsse von unten gesehen

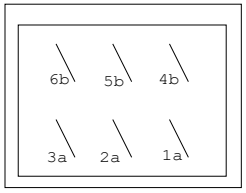

Schalter

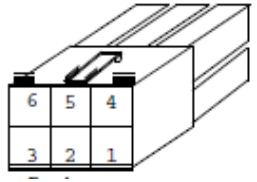

Buchsengehäuse

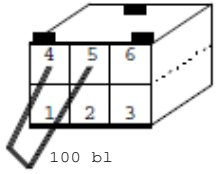

Steckergehäuse

Diese Zeichnung ist urheberrechtlich geschützt. Eine unerlaubte Vervielfältigung sowie Weitergabe an Dritte verpflichtet zu Schadenersatz und kann strafrechtliche Folgen haben!

				Datum	17.02.21		Projekt-Nummer	Anlage	=VM
				Bearb.	DLS		20HS-00025	Ort	+CB_1
				Gepr.	ZF-SE				
Zustand	Änderung	Datum	Name	Norm	DIN 81346	Ers. f.	Ers. d.	Zeichnungsnummer 17.01.05.00116	Blatt 12 von 12

Materialliste

Artikelnummer	Menge	BMK	Hersteller	Bezeichnung
21.04.05.00854	1	=VM+CB_1-10XG1		Einbaubuchse
10.05.01.00263	2	=VM+CB_1-8MB1	ASCO NUMATICS	EMV 12 12V-DC 3/2 NO
10.06.02.00737	2	=VM+CB_1-7BP1		VSi/IO_Link ohne Display
17.01.05.00057	1	=VM+FFS-9KF1	TELERADIO	Funkfernsteuerung
21.01.03.00040	2	=VM+CB_1-8SF2	MERKLIN	Einlegeschild lösen
21.01.03.00041	1	=VM+CB_1-8SF1	MERKLIN	Einlegeschild saugen
21.01.03.00080	1	=VM+CB_1-5SF1	MALUSKA	Umschalter 2-polig 3 Stellungen
21.01.03.00082	2	=VM+CB_1-8SF2	SCHNEIDER ELECTRIC	Schaltelement NO
21.01.03.00083	1	=VM+CB_1-8SF1	SCHNEIDER ELECTRIC	Hilfskontakt NC
21.01.03.00086	1	=VM+CB_1-8SF1	SCHNEIDER ELECTRIC	LEUCHTDRUCKTASTER ZB5 WH
21.01.03.00088	2	=VM+CB_1-8SF2	SCHNEIDER ELECTRIC	LEUCHTDRUCKTASTER ZB5 RD
21.02.03.00070	5	=VM+CB_1-7KF3		Relais
21.04.01.00091	2 m	=VM+CB_1-5WD1	LAPP	UL-CSA-HAR Style 1015 / 1,0 DBWH
21.04.01.00125	6 m	=VM+CB_1-5WD2	LAPP	UL-CSA-HAR Style 1015 / 1,0 DB
21.04.02.00001	1,2 m	=VM+CB_1-6WD1	LAPP	ÖLFLEX 110 2x1mm²
21.04.02.00054	0,3 m	=VM+FFS-9WG1	LAPP	ÖLFLEX 150 QUATTRO 7G1/18AWG
21.04.05.00002	10	=VM+FFS-9KF1		Aderendhülse RT 1mm²

Diese Zeichnung ist urheberrechtlich geschützt. Eine unerlaubte Vervielfältigung sowie Weitergabe an Dritte verpflichtet zu Schadenersatz und kann strafrechtliche Folgen haben!

				Datum	17.02.21		SCHMALZ	Materialliste	Projekt-Nummer 20HS-00025	Anlage =VM
				Bearb.	DLS					Ort +
				Gepr.	ZF-SE					
Zustand	Änderung	Datum	Name	Norm	DIN 81346	Ers. f.	Ers. d.	VacuMaster Glass 1000 Freigabe Lastausgleich		Zeichnungsnummer 17.01.05.00116 / Blatt 1 / von 12

Materialliste

Artikelnummer	Menge	BMK	Hersteller	Bezeichnung
21.04.05.00028	27	=VM+CB_1-5SF1		Flachsteckhülse 6,3x0,8
21.04.05.00060	2	=VM+CB_1-6PF1		Rundsteckkontakt male
21.04.05.00061	2	=VM+CB_1-6PF1		Rundsteckkontakt female
21.04.05.00078	2	=VM+CB_1-6PF1		Quetschkabelschuh M3 Ringform
21.04.05.00139	2	=VM+CB_1-5TA1		Flachsteckhülse
21.04.05.00187	2	=VM+CB_1-6PF1		Flachsteckhülse 2,8 x 0,5
21.04.05.00684	1	=VM+CB_1-10XG2	Phoenix Contact	Steckverbinder
21.04.06.00374	2	=VM+FFS-9XG1		Steckergehäuse
21.04.06.00375	1	=VM+CB_1-8XG1		Buchsengehäuse
21.04.06.00378	9	=VM+CB_1-10XG2		Steckerkontakt
21.04.06.00379	10	=VM+CB_1-10XG1		Kontaktbuchse
21.05.01.00231	2	=VM+CB_1-XD1		Endhalter Clipfix-35
21.05.01.00251	1	=VM+CB_1-XD1	PHOENIX CONTACT	Abschlussdeckel GY PHO
21.05.01.00280	21	=VM+CB_1-XD1	PHOENIX CONTACT	Mehrstockklemme,PT 1,5-3L
21.05.01.00281	1	=VM+CB_1-XD1	PHOENIX CONTACT	Schutzleitermehrstockklemme,PT 1,5-3PE
21.05.01.00372	2	=VM+CB_1-XD1	PHOENIX CONTACT	Durchgangsklemme Quattro PT 1,5
21.05.04.00037	1	=VM+CB_1-5FC1		Flachsicherung 10A

Diese Zeichnung ist urheberrechtlich geschützt. Eine unerlaubte Vervielfältigung sowie Weitergabe an Dritte verpflichtet zu Schadenersatz und kann strafrechtliche Folgen haben!

				Datum	17.02.21			Materialliste	Projekt-Nummer	Anlage	=VM
				Bearb.	DLS				20HS-00025	Ort	+
				Gepr.	ZF-SE						
Zustand	Änderung	Datum	Name	Norm	DIN 81346	Ers. f.	Ers. d.	VacuMaster Glass 1000 Freigabe Lastausgleich		Zeichnungsnummer 17.01.05.00116	Blatt 2 von 12

Materialliste

Artikelnummer	Menge	BMK	Hersteller	Bezeichnung
21.05.05.00059	1	=VM+CB_1-6PF1	AVENT	Schallgeber KPEG-650SA
21.05.05.00075	1	=VM+CB_1-7PF1		Unterspannungswächter
21.05.06.00100	1	=VM+CB_1-5FC1	BAUDE	Universal Sicherungshalter
21.07.01.00166	1	=VM+CB_1-5TA1	VÖLMLE & RICKERT	AGM Gerätebatterie
27.03.01.00742	1	=VM+FFS-9KF1		Aufkleber remote control

Diese Zeichnung ist urheberrechtlich geschützt. Eine unerlaubte Vervielfältigung sowie Weitergabe an Dritte verpflichtet zu Schadenersatz und kann strafrechtliche Folgen haben!

				Datum	17.02.21		Materialliste	Projekt-Nummer	Anlage	=VM
				Bearb.	DLS			20HS-00025	Ort	+
				Gepr.	ZF-SE					
Zustand	Änderung	Datum	Name	Norm	DIN 81346	Ers. f.	Ers. d.	VacuMaster Glass 1000 Freigabe Lastausgleich	Zeichnungsnummer 17.01.05.00116	Blatt 3 von 12

Circuit diagrams

Manufacturer	J.Schmalz GmbH Johannes Schmalz Str.1 Glatten Deutschland
System designation	VacuMaster Glass 600 Release load balancing
Work order number	20HS-00025
Drawing number	17.01.05.00116
Project start	21.08.19
Year of manufacture	2018
Version / Review	V.01
Language	EN
Project manager	TP
Mechanical design	TBZ
Electrical design	DLS

Last change	25.05.2021	WSCAD version	6.4.1.6
Last changed by	DLS	Total number of pages	14
Inspection date	01.07.2021		
Inspector	ZF-SE		

This diagram is protected by copyright law. The duplication and/or distribution of this diagram is only allowed with permission from WSCAD

				Date	17.02.21			Cover Sheet	Project number 20HS-00025	Installation	=VM
				Drn By	LZ					City	+
				Che.	ZF-SE						
Status	Rev.	Date	Name	Stand.	DIN 81346	Created for	Created by			Drawing number 17.01.05.00116	Sheet 1 of 14

Switchgear Technical Data

Technical specifications

Operating Voltages	:	12V DC
Control Voltages	:	12V DC
Frequency	:	-
Control Cabinet	:	Rittal
Form/Type	:	-
Type / Line	:	H05V-K / H07V-K
Cross Section	:	min. 0,5mm²
Control Terminals	:	Phoenix / Push In
Current Clamps	:	Phoenix / Push In

Core Colors

Main Circuits	:	Black (BK)
Control Voltage Ac ==> 230 Vac	:	Red (RD)
Neutral	:	Light Blue (BU)
Protective Ground	:	Green-Yellow (GNYE)
Dc Control Voltage ==> 24Vdc	:	Dark Blue (DB)
Dc Control Voltage ==> 0Vdc	:	Dark Blue - White (DBWH)
External Voltage	:	Orange (OR)

Terminal Blocks In Control Cabinet

VM	:	VacuMaster
CB_1	:	Cabinet
FFS	:	remote control

Terminal Block Identification

Example :

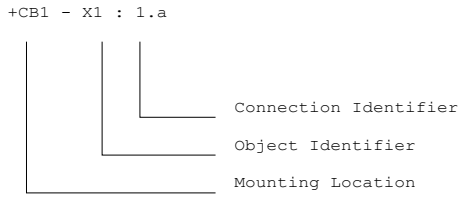

Identification Block

=	Installation
+	Mounting Location
-	Equipment

RIF-Composition

Example :

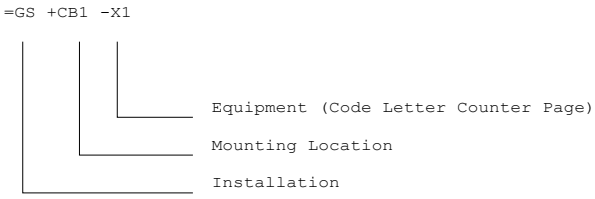

This diagram is protected by copyright law. The duplication and/or distribution of this diagram is only allowed with permission from WSCAD

				Date	17.02.21			Project number	Installation =VM
				Drn By	LZ			20HS-00025	City +CB1
				Che.	ZF-SE				
Status	Rev.	Date	Name	Stand.	DIN 81346	Created for	Created by	Drawing number 17.01.05.00116	Sheet 2 of 14

Switchgear Technical Data

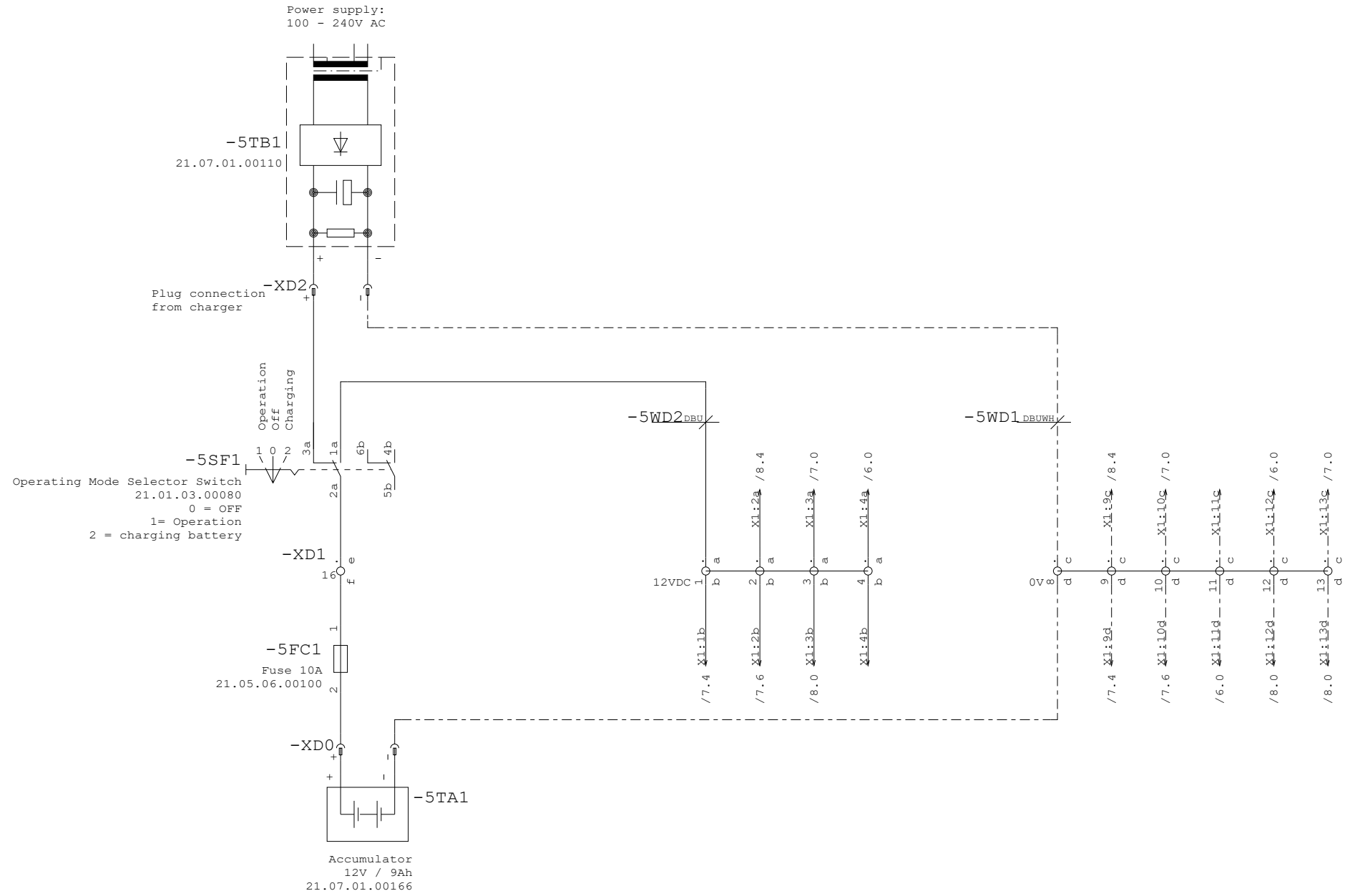

This diagram is protected by copyright law. The duplication and/or distribution of this diagram is only allowed with permission from WOCAD

				Date	17.02.21		Einspeisung	Project number 20HS-00025	Installation=VM
				Drn By	LZ				City +CB_1
				Che.	ZF-SE				
Status	Rev.	Date	Name	Stand.	DIN 81346	Created for	Created by		Drawing number 17.01.05.00116 / Sheet 4 / of 14

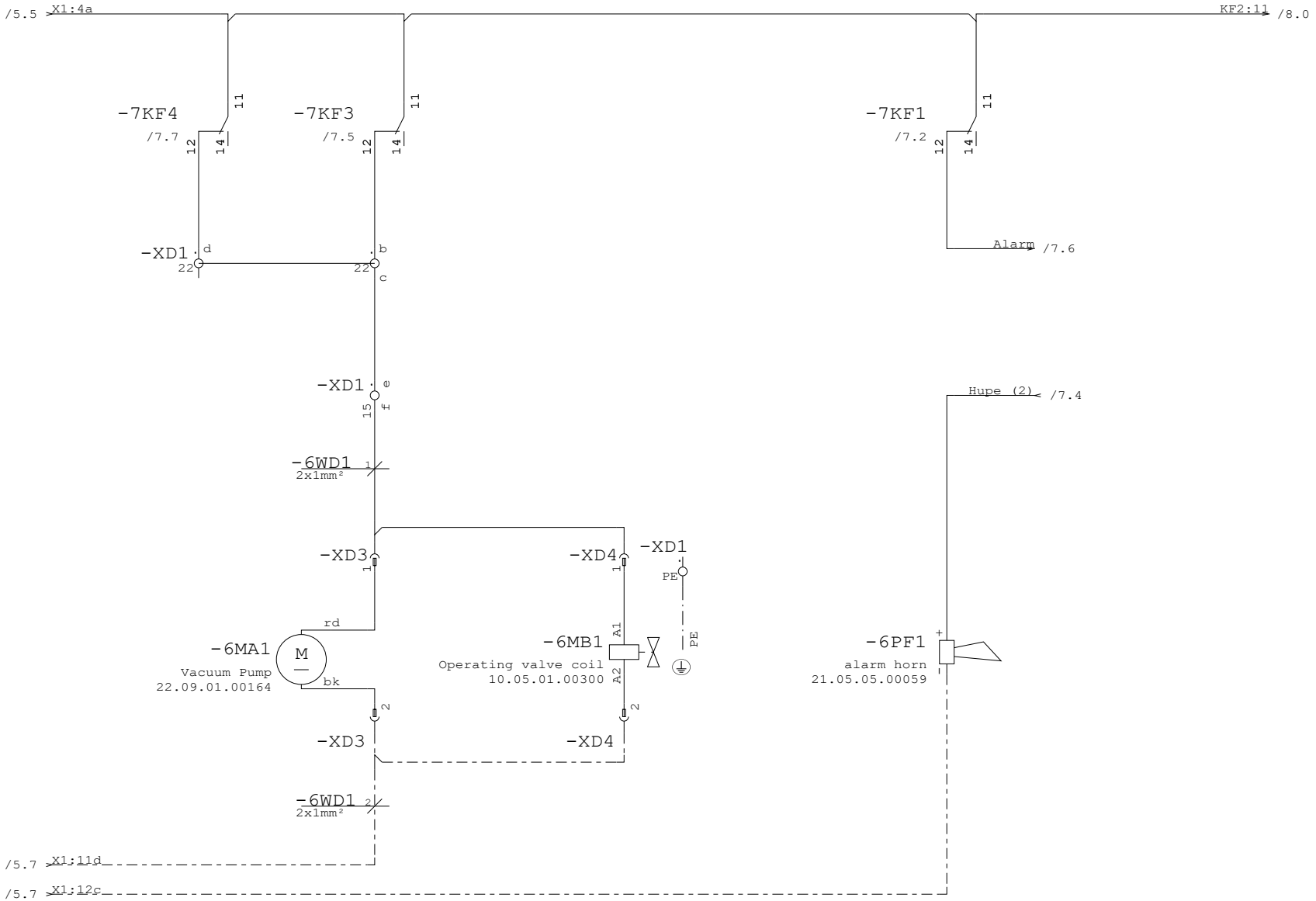

This diagram is protected by copyright law. The duplication and/or distribution of this diagram is only allowed with permission from WAGO

				Date	17.02.21		Aktorik	Project number 20HS-00025	Installation=VM
				Drn By	LZ				City +CB_1
				Che.	ZF-SE				
Status	Rev.	Date	Name	Stand.	DIN 81346	Created for	Created by		Drawing number 17.01.05.00116 / Sheet 5 / of 14

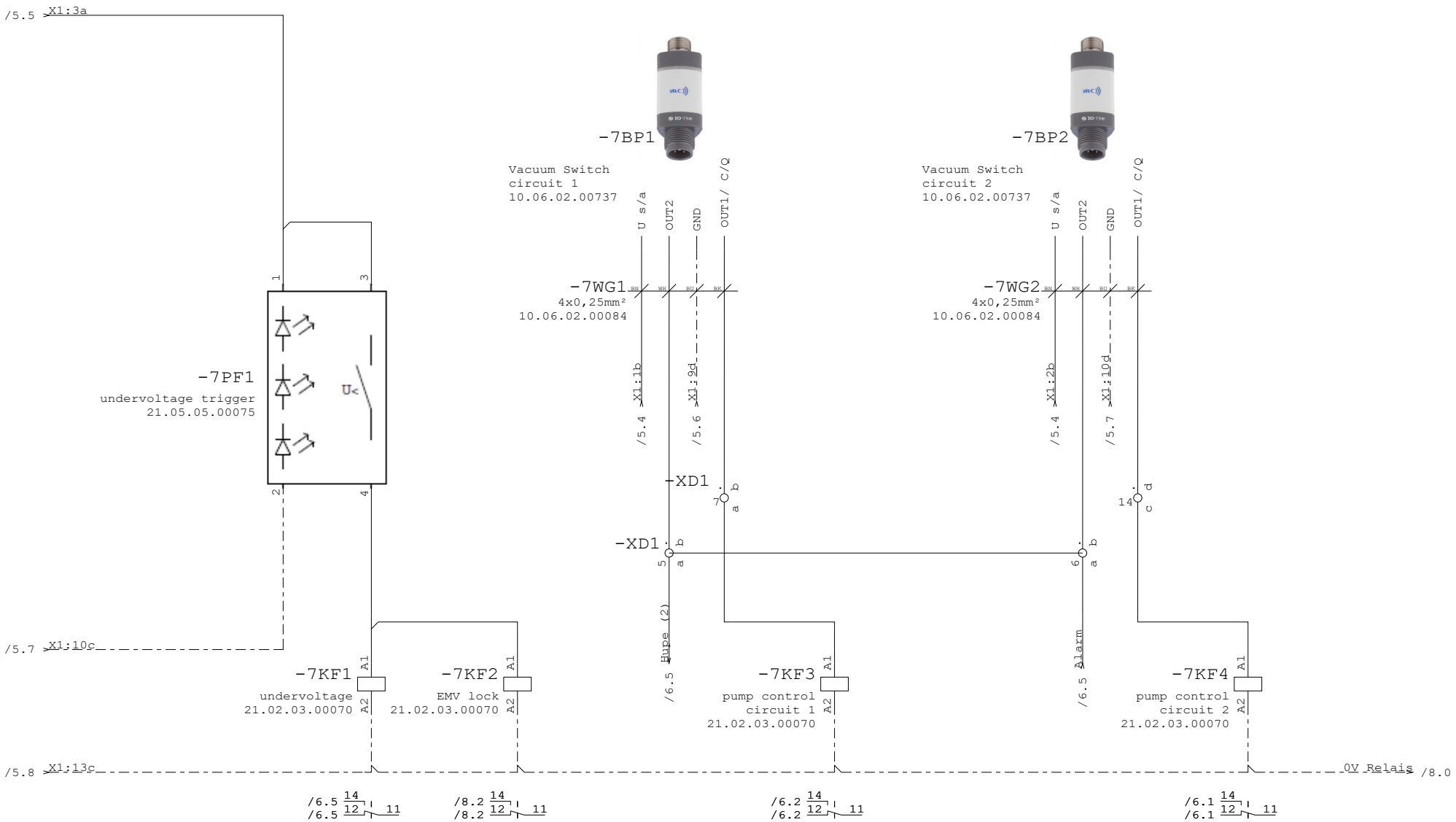

This diagram is protected by copyright law. The duplication and/or distribution of this diagram is only allowed with permission from WOCAD

				Date	17.02.21			Sensorik	Project number 20HS-00025	Installation=VM
				Drn By	LZ					City +CB_1
				Che.	ZF-SE					
Status	Rev.	Date	Name	Stand.	DIN 81346	Created for	Created by		Drawing number 17.01.05.00116	Sheet 6 of 14

/5.5 X1:3b
/6.7 KF2:11

-8SF1
Suck
21.01.03.00086

interface remote control

-7KF2
/7.3

-XD1

/5.6 X1:9c
/5.4 X1:2a

-8XG1 -8XG2
Socket Housing 21.04.06.00375
Plug Case 21.04.06.00374

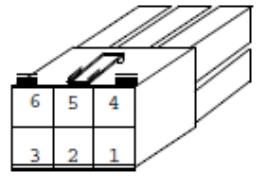

Buchsengehäuse

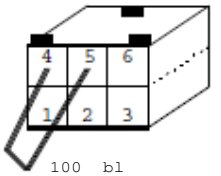

Steckergehäuse

-8SF2
release 1
21.01.03.00088

-8KF1
/8.2

-8SF3
release 2
21.01.03.00088

-XD1

Interface release load balancing

BN
WH
BU
BK

-10XG1-10XG2
flush-type socket 21.04.05.00854
Connector 21.04.05.00684

-XD1

-8WD1
3x1mm²
21.04.05.00363

-8WD2
3x1mm²
21.04.05.00363

-8KF1
auxiliary relay suck/release
21.02.03.00070

-8MB1
EMV 1
10.05.01.00263

-8MB2
EMV 2
10.05.01.00263

/7.8 0V Relais
/5.7 X1:12d
/5.8 X1:13d

/8.1
/8.1

This diagram is protected by copyright law. The duplication and/or distribution of this diagram is only allowed with permission from WSCAD

				Date	17.02.21		EMV / Schnittstelle FFS	Project number 20HS-00025	Installation=VM
				Drn By	LZ				City +CB_1
				Che.	ZF-SE				
Status	Rev.	Date	Name	Stand.	DIN 81346	Created for	Created by		Drawing number 17.01.05.00116	Sheet 7 of 14

+FFS

additional option: remote control
17.01.05.00059

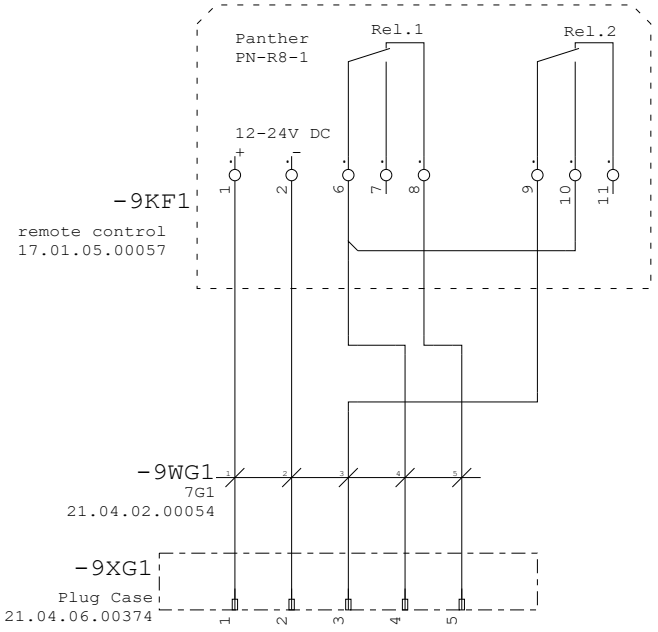

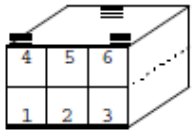

X4 Steckergehäuse

Verschlussstopfen links

Teleradio
Panther
PN-R8-1

This diagram is protected by copyright law. The duplication and/or distribution of this diagram is only allowed with permission from WSCAD

				Date	17.02.21		Option FFS	Project number 20HS-00025	Installation=VM
				Drn By	LZ				City +CB_1
				Che.	ZF-SE				
Status	Rev.	Date	Name	Stand.	DIN 81346	Created for	Created by		Drawing number 17.01.05.00116 Sheet 8 of 14

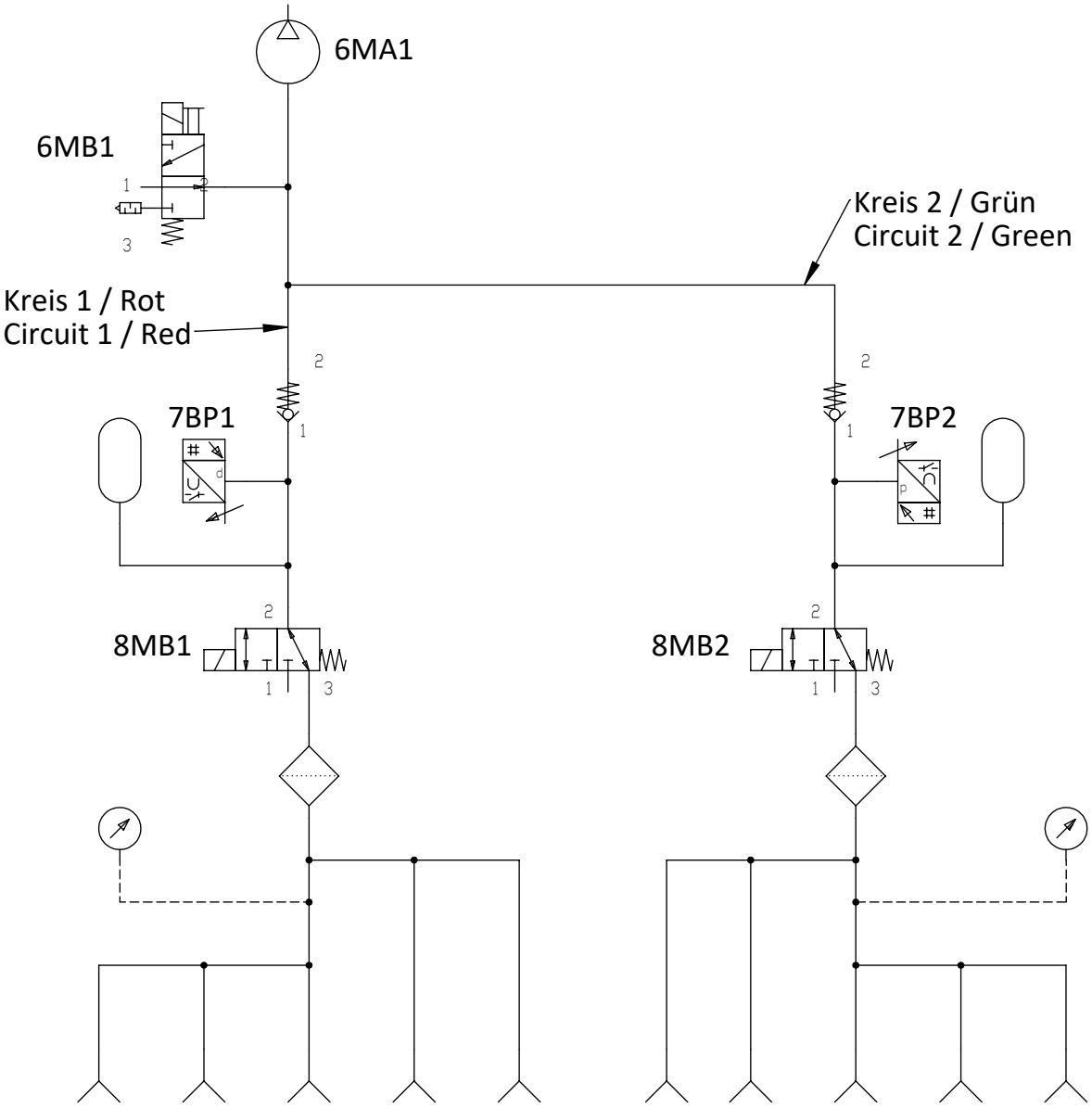

Index/Rev	Art der Änderung / modification	Datum bearb. / date of modification	Name bearb. modified by	Datum gepr. / date of verfication	Name gepr. / verified by	aktueller Status / actual status
						Freigegeben Released

Nicht tolerierte Maße / dimension without tolerance -Auswählen-	Oberfläche/surface	Format DIN A4	Maßstab / scale 1:1	Gewicht / weight -
mitgeltende Normen / complying with the standard			Mat. Schaltplan / circuit diagram	Volumen / Volume -
			Mat.-nr. Schaltplan/c.diagram -	Oberfläche / surface - Baugruppe - / - Assembly -
	Datum/date	Name/name		
	Bearbeitet / create 18.01.2021	BMR	Benennung / partname **Pneumatikschaltplan** Pneumatic circuit diagram	
Artikelnr. des Kunden - Auftr.-Nr./ item number of customer - order number	Geprüft / verified 20.01.2021	TBZ	PNEU-PLAN VM-GLASS 1000-10-2Kreis	
	Sicherheitsklasse / security class -			

Urheberschutzrechte nach DIN ISO 16016 Absatz 4.2 werden beansprucht
copyright reserved
DIN ISO 16016 paragraph 4.2

SCHMALZ

Zeichnungsnummer / number of drawing	Index/Rev	Blatt/sheet
17.01.05.00115	0	1/1

17.01.05.00115_0_AA